FSK No:

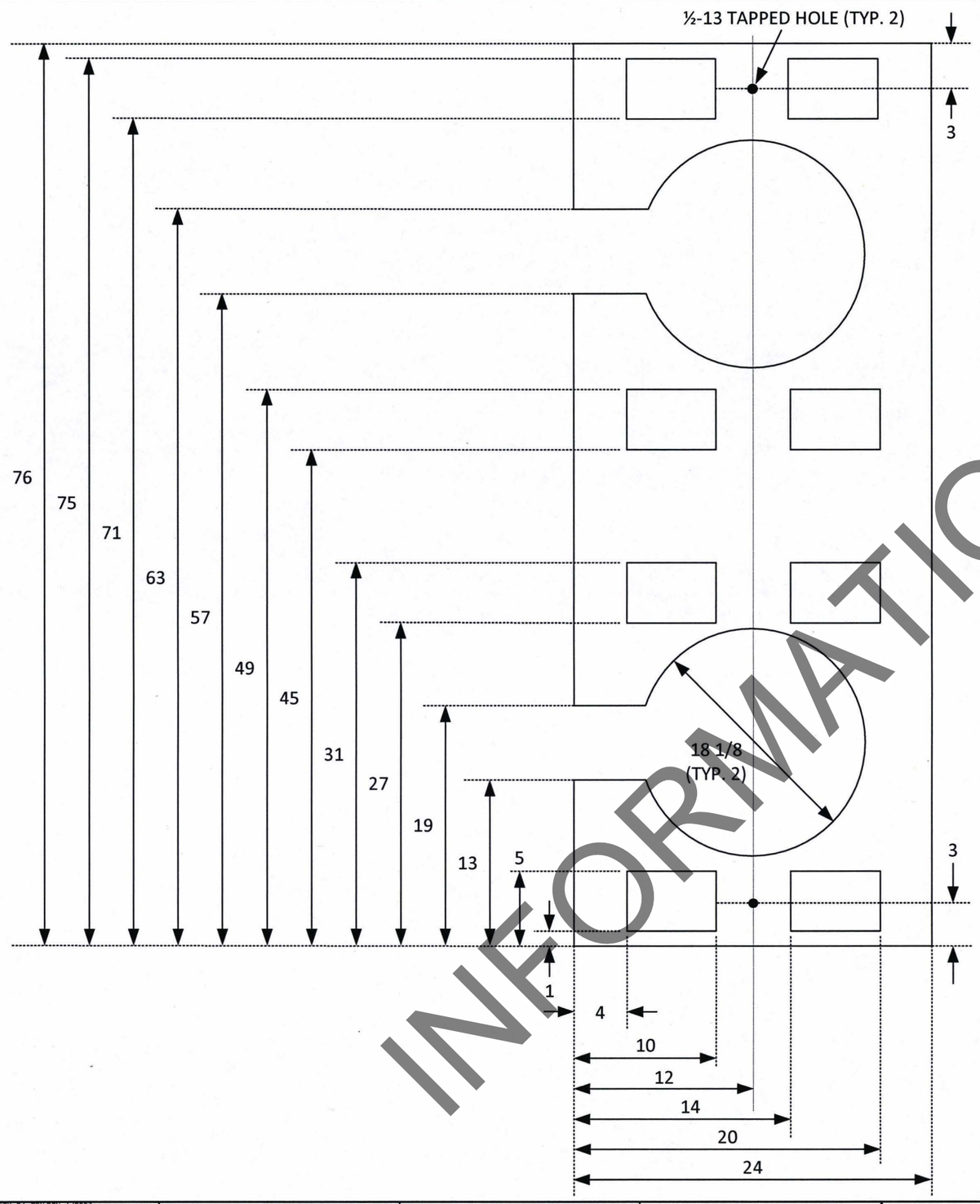

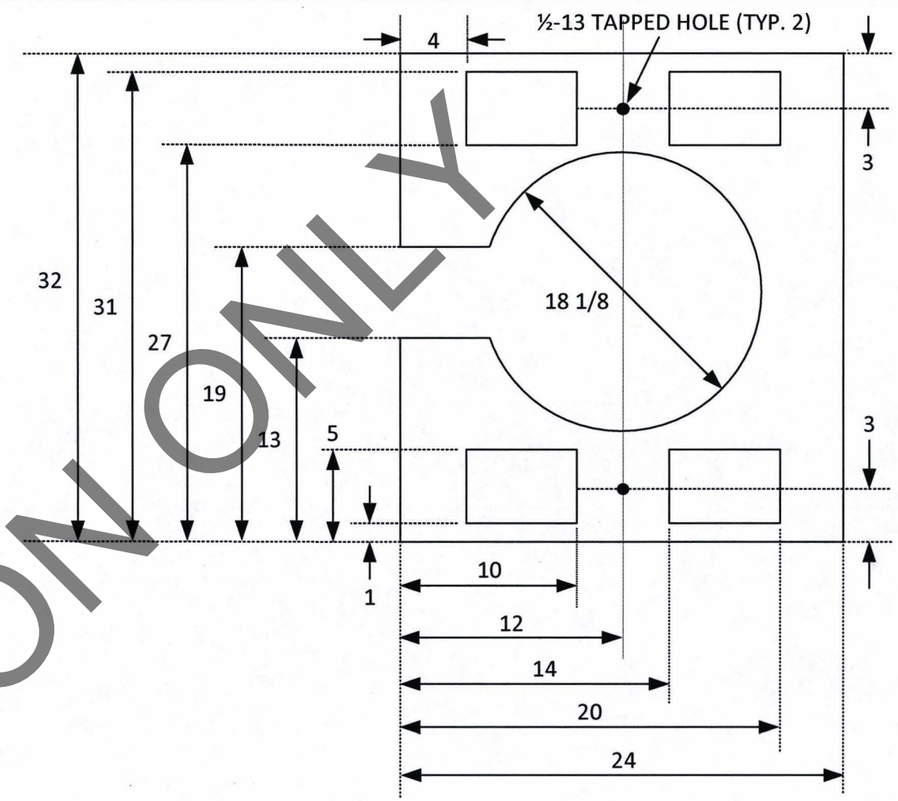

General Notes:

1. All dimensions are in inches unless otherwise noted
2. Sketch is not to scale
3. Material will be 1/2 inch thick A36 steel
4. Total quantity made will be 4 of each plate
5. Weight of each bubbler assembly is 643.26 lbs per Section 8 of 24590-101-TSA-W000-0010-409-1209
6. All dimensions are +/- 1 inch except for the diameters

NOTE 2: THIS FIELD SKETCH SHALL NOT BE USED AS THE BASIS FOR ANY VERIFICATION/ACCEPTANCE FOR PERMANENT PLANT ITEMS. REVIEW REFERENCED DESIGN DRAWINGS AND SPECIFICATIONS FOR DESIGN REQUIREMENTS.

NOTE 1: THIS FIELD SKETCH IS NOT A PERMANENT PLANT DESIGN DRAWING AND DOES NOT REPLACE OR SUPERCEDE ANY ISSUED DESIGN DOCUMENTS.

REFERENCE DRAWING/DOCUMENTS

DRAWING NUMBER	DRAWING TITLE

ISSUED BY RPP-WTP-PDC

REV	DATE	APPROVAL RECORD / DESCRIPTION	DRAWN	CHKD	FEM APVD
0	10/20/15	ISSUE FOR CONSTRUCTION	GJH	SCB	PH

SCALE: NTS

BECHTEL

PROJECT No. 24590

PREPARED BY: 10/20/15 APPROVED BY: FEM: 10/20/15

CHECKED BY: 10/20/15

FIELD SKETCH

LAW MELTER BUBBLER STAND

FSK NO.: 24590-LAW-FSK-CON-M-15-00003001 SHEET 1 OF 1 REV 0

RIVER PROTECTION PROJECT - WASTE TREATMENT PLANT

R11723825

FORM FSK_D4_SDN.DGN 4/2003

'D' SIZE - 34x22

WHEN REFERENCING DRAWING AND DIM NUMBERS IN DOCUMENTS, BE SURE TO INCLUDE DASHES BETWEEN ELEMENTS

12/6/2015 7:14:47 AM

LAST PLOTTED BY: gjhor1

C:\Users\gjhor1\Desktop\FSK_05_SDN.dgn

INFORMATION ONLY

FSK No: 24590-LAW-FSK-CON-M-16-00001001

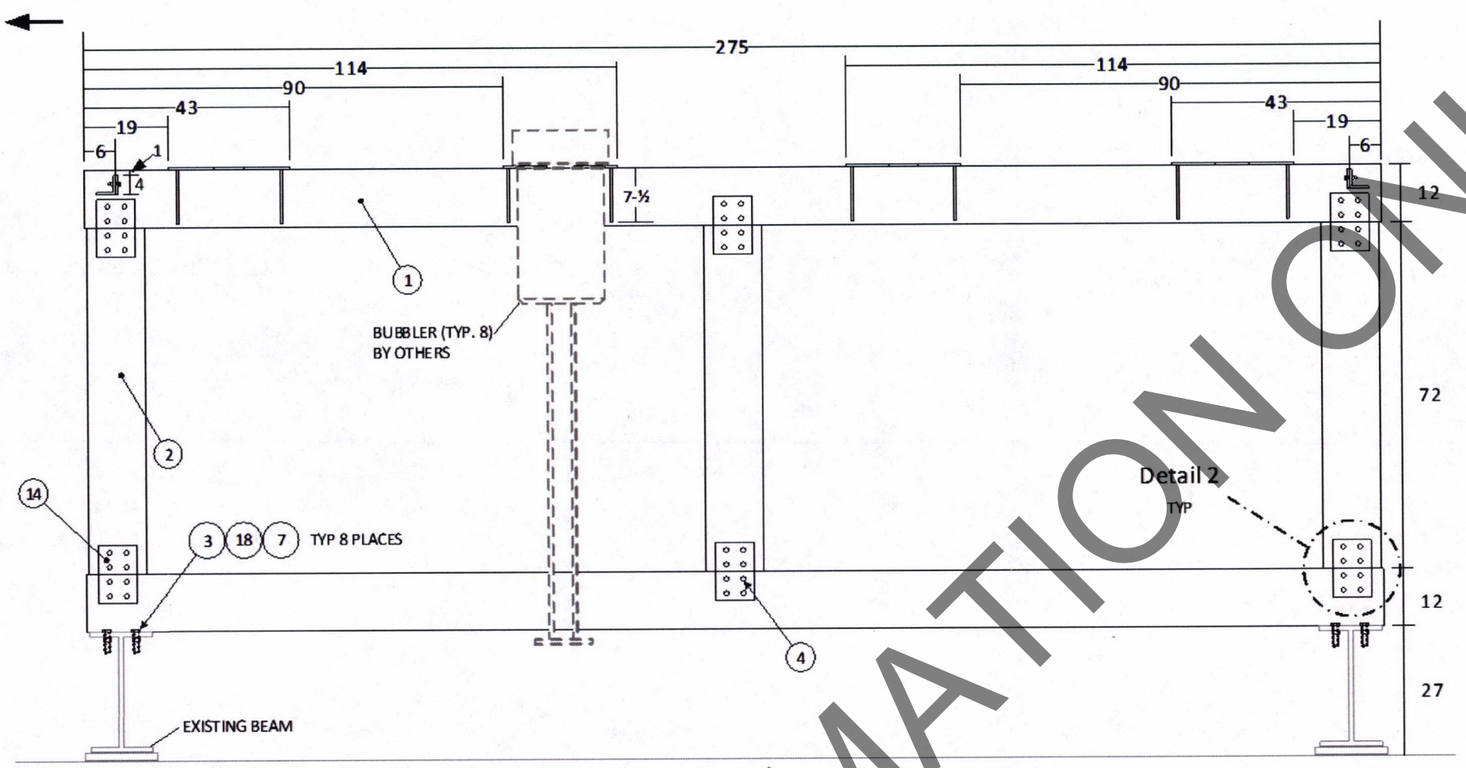

FRONT VIEW

PARTS LIST/MATERIAL LIST				
QTY	DESCRIPTION	MATERIAL	SHEET	ITEM NO.
2	8" x 12" x 275" TUBE STEEL, 3/8" THICKNESS	A36 MIN	1	1
3	8" x 12" x 72" TUBE STEEL, 3/8" THICKNESS	A36 MIN	1	2
8	3/4" - 4" LONG BOLT	A307 MIN.	1	3
48	1/2" ALL THREAD ROD	A193 MIN	1	4
96	1/2" NUTS	A563 MIN	3	5
16	7 1/2" x 20" x 1/2" THICK PLATE	A36 MIN	3	6
8	3/4" NUT	A563 MIN	1	7
4	23" x 56" x 1/2" THICK PLATE	A36 MIN	3	8
2	4" x 4" x 1/2" ANGLE (FIELD CUT TO LENGTH)	A36 MIN	3	9
2	4" x 4" x 1/2" ANGLE, 18" LONG	A36 MIN	3	10
4	1/2" BOLT	A307 MIN.	3	11
4	1/2 NUT	A563 MIN	3	12
2	4" x 4" x 1/2" THICK PLATE	A36 MIN	3	13
12	8" x 12" x 1/2" THICK PLATE	A36 MIN	1	14
4	1/2" BOLT	A307 MIN.	2	15
4	1/2" NUT	A563 MIN	2	16
16	1/2" WASHER	CS or SS	2	17
16	3/4" WASHER	CS or SS	1	18

NOTES:
1. ALL DIMENSIONS ARE IN INCHES UNLESS OTHERWISE NOTED.
2. THE DRAWING IS NOT TO SCALE.
3. TOLERANCE FOR ALL DIMENSIONS EXCEPT DIAMETERS IS +/- 1".
4. WELD FILLER MATERIAL SHALL BE E70XX.
5. PERFORM VT PER AWS D1.1.
6. DIMENSIONS AND WELD DETAILS FOR THE BUBBLER SUPPORTING PLATE ARE TYPICAL FOR ALL FOUR.

ISSUED BY
RPP-WTP-PDC

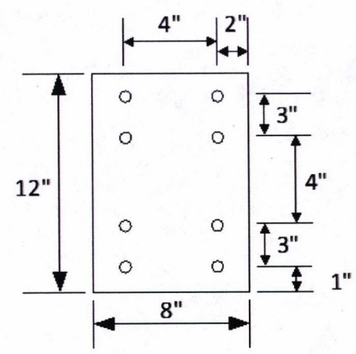

DETAIL 2

R11752472

NOTE 2: THIS FIELD SKETCH SHALL NOT BE USED AS THE BASIS FOR ANY VERIFICATION/ACCEPTANCE FOR PERMANENT PLANT ITEMS. REVIEW REFERENCED DESIGN DRAWINGS AND SPECIFICATIONS FOR DESIGN REQUIREMENTS.

NOTE 1: THIS FIELD SKETCH IS NOT A PERMANENT PLANT DESIGN DRAWING AND DOES NOT REPLACE OR SUPERCEDE ANY ISSUED DESIGN DOCUMENTS.

REFERENCE DRAWING/DOCUMENTS

DRAWING NUMBER	DRAWING TITLE

REV	DATE	APPROVAL RECORD / DESCRIPTION	DRAWN	CHKD	FEM APVD
0	2/1/16	ISSUE FOR CONSTRUCTION	CC		

SCALE: NTS

BECHTEL

PROJECT No. 24590

PREPARED BY: GARRETT HART

CHECKED BY: RYAN HOFF

APPROVED BY FEM: RICHARD PADILLA

FIELD SKETCH

LAW MELTER SECONDARY BUBBLER STAND

FSK NO.: 24590-LAW-FSK-CON-M-16-00001001

SHEET 1 OF 3 REV 0

RIVER PROTECTION PROJECT - WASTE TREATMENT PLANT

WHEN REFERENCING DRAWING AND DIM NUMBERS IN DOCUMENTS, BE SURE TO INCLUDE DASHES BETWEEN ELEMENTS

2/6/2015 7:14:47 AM

LAST PLOTTED BY: gjhart

C:\Users\gjhart\Desktop\FSK_05_SDN.dgn

FORM FSK_04_SDN.DGN 472003

'D' SIZE - 34x22

INFORMATION ONLY

FSK No: 24590-LAW-FSK-CON-M-16-00001002

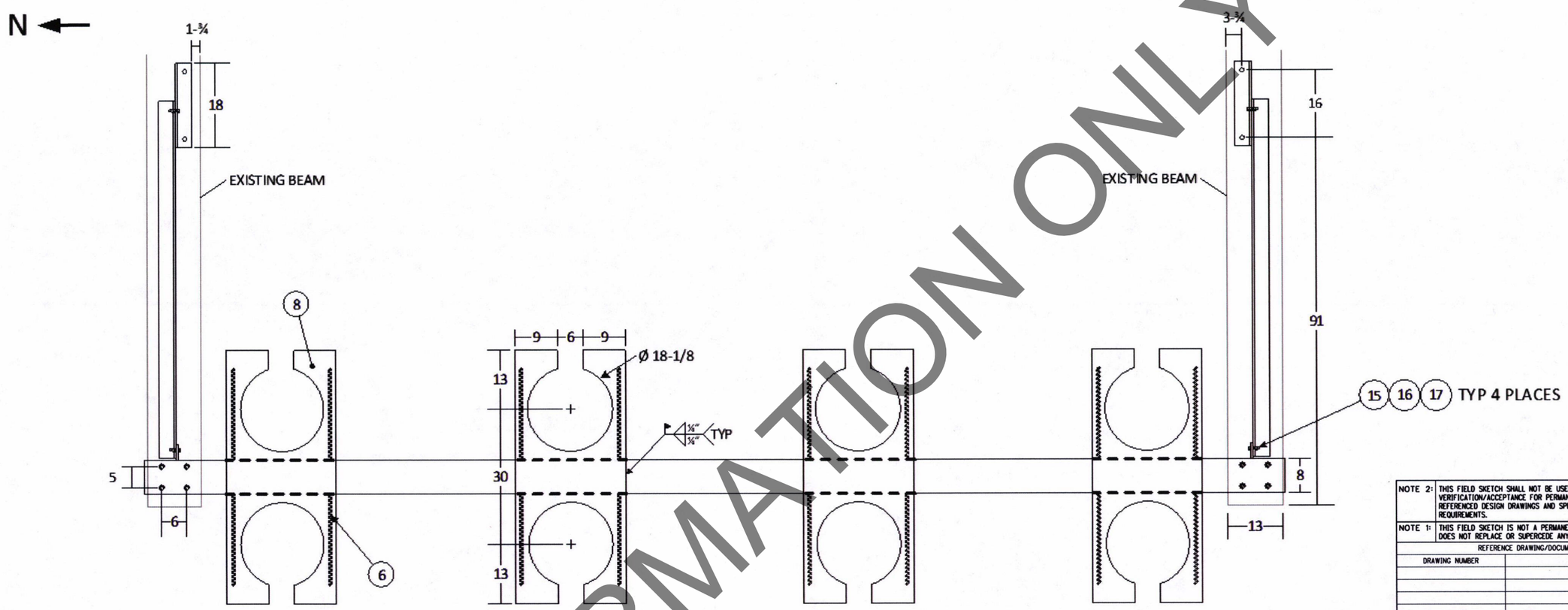

TOP VIEW

INFORMATION ONLY

ISSUED BY
RPP-WTP-PDC

R11752473

NOTE 2:	THIS FIELD SKETCH SHALL NOT BE USED AS THE BASIS FOR ANY VERIFICATION/ACCEPTANCE FOR PERMANENT PLANT ITEMS. REVIEW REFERENCED DESIGN DRAWINGS AND SPECIFICATIONS FOR DESIGN REQUIREMENTS.
NOTE 1:	THIS FIELD SKETCH IS NOT A PERMANENT PLANT DESIGN DRAWING AND DOES NOT REPLACE OR SUPERCEDE ANY ISSUED DESIGN DOCUMENTS.

REFERENCE DRAWING/DOCUMENTS

DRAWING NUMBER	DRAWING TITLE

REV	DATE	APPROVAL RECORD / DESCRIPTION	DRAWN	CHKD	FEM APVD
0	2/6/16	ISSUE FOR CONSTRUCTION	CC	RJH	RP

SCALE: NTS

BECHTEL

PROJECT No. 24590

PREPARED BY: GARRETT HART

CHECKED BY: RYAN HOFF

APPROVED BY FEM: RICHARD PADILLA

FIELD SKETCH

LAW MELTER SECONDARY BUBBLER STAND

FSK NO.: 24590-LAW-FSK-CON-M-16-00001002 | SHEET 2 OF 3 | REV 0

RIVER PROTECTION PROJECT - WASTE TREATMENT PLANT

WHEN REFERENCING DRAWING AND DIM NUMBERS IN DOCUMENTS, BE SURE TO INCLUDE DASHES BETWEEN ELEMENTS

2/6/2015 7:14:47 AM

LAST PLOTTED BY: gjhart

C:\Users\gjhart\Desktop\FSK_05_SDN.dgn

FORM FSK_D4_SDN.DGN 4/2003

'D' SIZE - 34x22

FSK No: 24590-LAW-FSK-CON-M-16-00001003

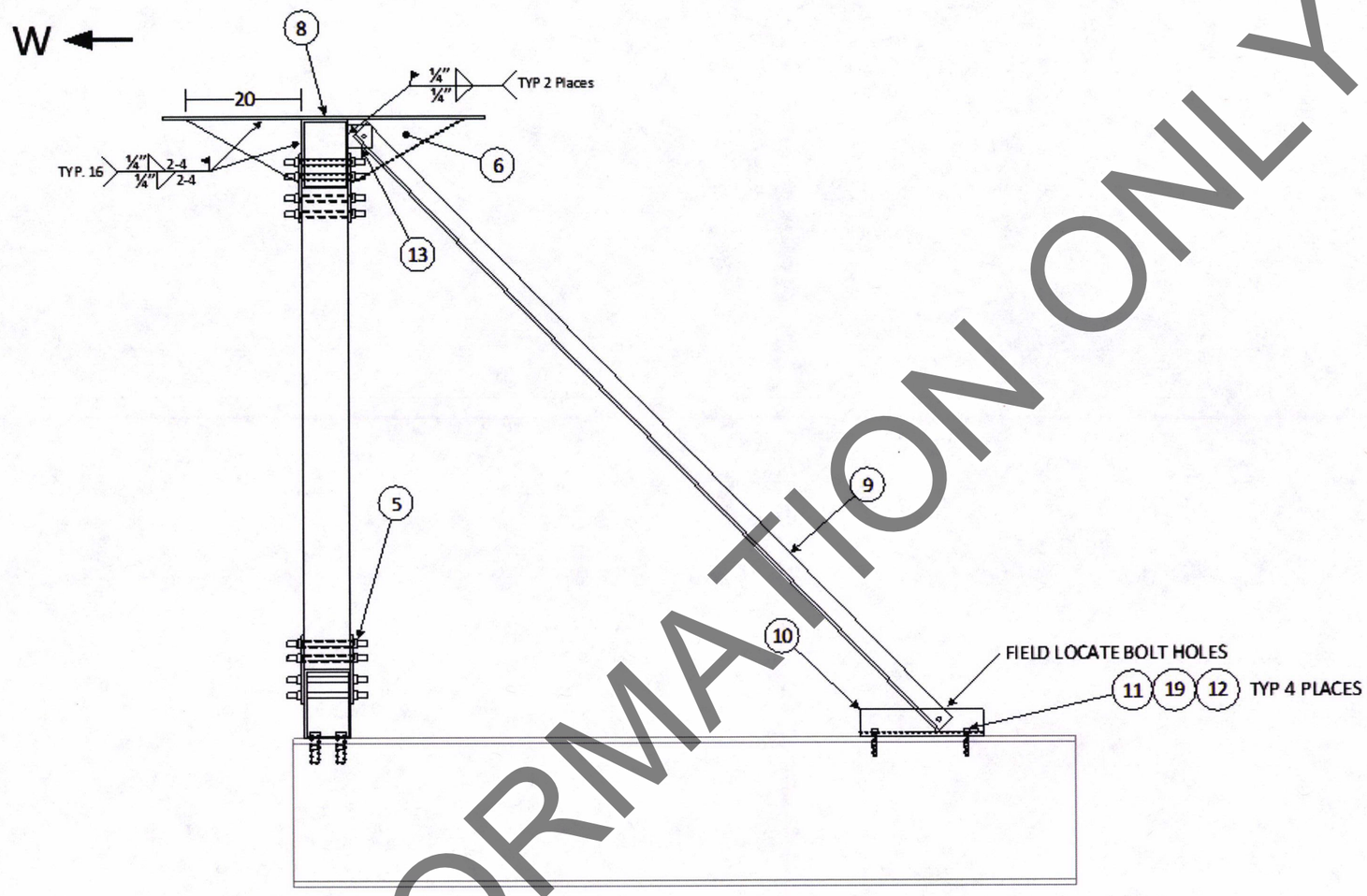

SIDE VIEW

INFORMATION ONLY

ISSUED BY
RPP-WTP-PDC

R11752474

NOTE 2: THIS FIELD SKETCH SHALL NOT BE USED AS THE BASIS FOR ANY VERIFICATION/ACCEPTANCE FOR PERMANENT PLANT ITEMS. REVIEW REFERENCED DESIGN DRAWINGS AND SPECIFICATIONS FOR DESIGN REQUIREMENTS.

NOTE 1: THIS FIELD SKETCH IS NOT A PERMANENT PLANT DESIGN DRAWING AND DOES NOT REPLACE OR SUPERCEDE ANY ISSUED DESIGN DOCUMENTS.

REFERENCE DRAWING/DOCUMENTS

DRAWING NUMBER	DRAWING TITLE

REV	DATE	APPROVAL RECORD / DESCRIPTION	DRAWN	CHKD	FEM APVD
0	2/6/16	ISSUE FOR CONSTRUCTION	CC	RP	RG

SCALE: NTS

BECHTEL

PROJECT No. 24590

PREPARED BY: GARRETT HART

CHECKED BY: RYAN HOFF

APPROVED BY FEM: RICHARD PADILLA

FIELD SKETCH

LAW MELTER SECONDARY BUBBLER STAND

FSK NO.: 24590-LAW-FSK-CON-M-16-00001003 | SHEET 3 OF 3 | REV 0

RIVER PROTECTION PROJECT - WASTE TREATMENT PLANT

WHEN REFERENCING DRAWING AND DIM NUMBERS IN DOCUMENTS, BE SURE TO INCLUDE DASHES BETWEEN ELEMENTS

12/6/2015 7:14:47 AM

LAST PLOTTED BY: gjhart
C:\Users\gjhart\Desktop\FSK_05_SDN.dgn

FORM FSK_04_SDN.DGN 4/2003

'D' SIZE - 34x22