BILL OF MATERIALS

ITEM	QTY	DESCRIPTION	DOCUMENT NUMBER	MATERIAL	WEIGHT (LBS)
1	1	CROSBY|STRAIGHTPOINT LLP6T5 LOADLINK PLUS	-	-	5.3
2	1	MCMASTER CARR 3812T32 FLUSH PIN SHACKLE	-	-	10.00
3	1	CROSBY ALLOY EYE HOOK 22 TON			39.5
4	1	COLUMBUS MCKINNON M9156P LONG REACH SHACKLE	-	-	12.9
6 5	1	LEMO R/H CONNECTOR FMG.4N.312.TLCY12	-	-	1.1

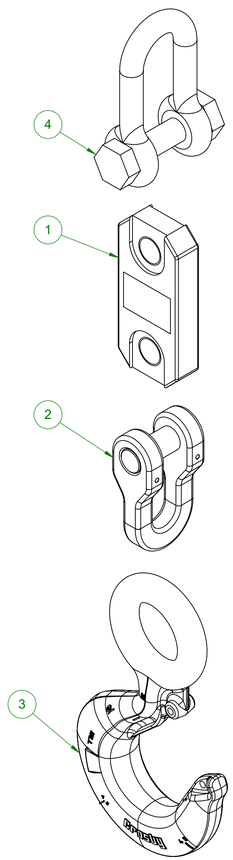

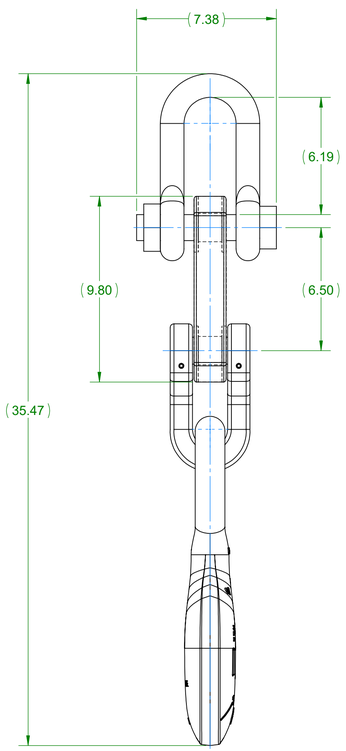

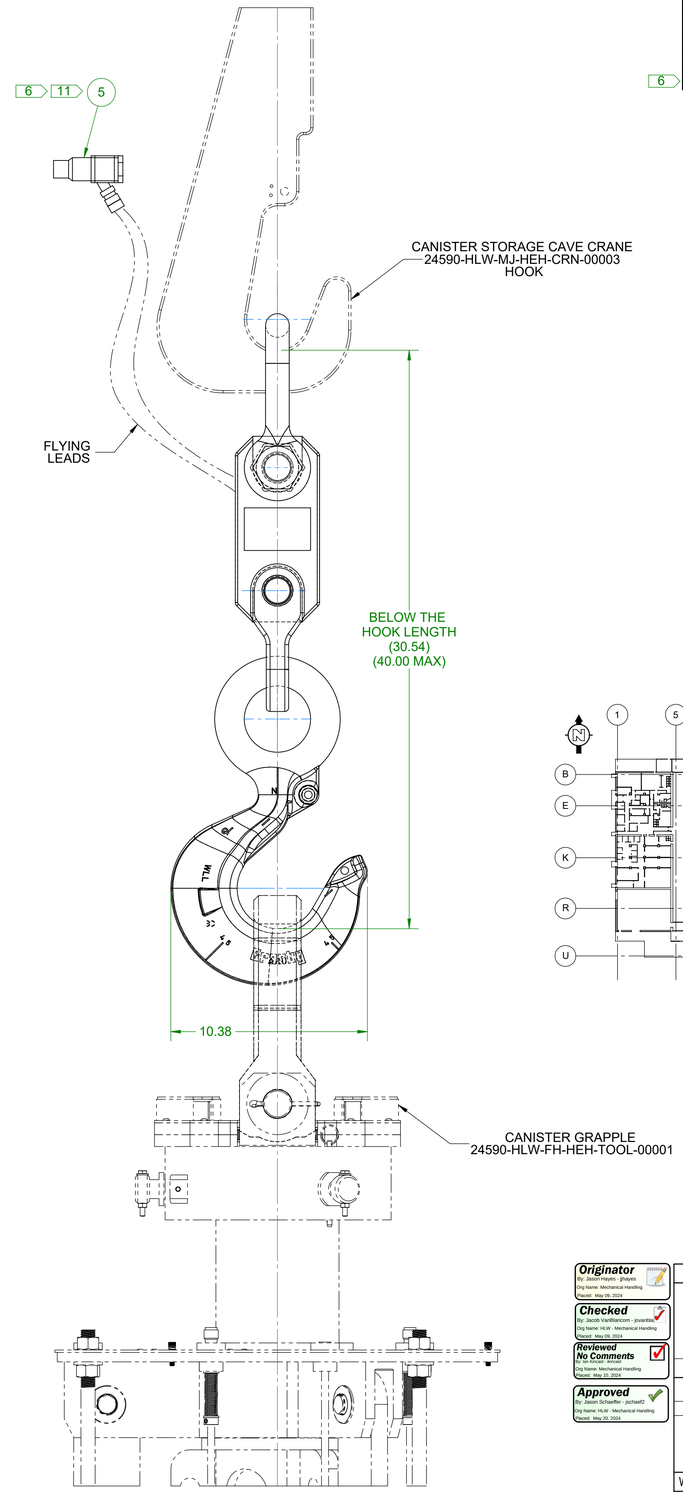

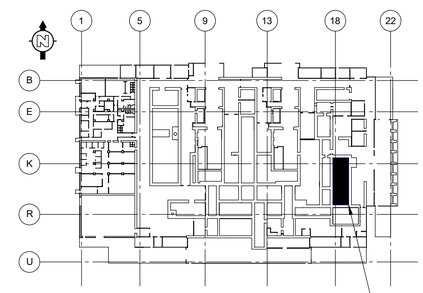

0' ELEVATION KEY PLAN

NOTES:

1. THIS DRAWING PROVIDES BASIC OUTLINES, DESIGN OBJECTIVES AND BOUNDING DIMENSIONS TO CONTRACTED DESIGN OR FABRICATION SUPPLIER(S) AND SHALL NOT BE USED TO CONFIRM THE AS BUILT WTP STRUCTURE, SYSTEM OR COMPONENT IDENTIFIED HEREIN. SEE SELLER INFORMATION FOR FINAL CONFIGURATION PROVIDED IN CONFORMANCE TO PURCHASE ORDER.
2. SELECTION OF COMPONENTS ON THIS DRAWING IS A PROPOSAL ONLY. THE SELLER SHALL BE RESPONSIBLE FOR FULL VALIDATION OF THE COMPONENTS SELECTED FOR THE CONTRACTED APPLICATION, WHETHER IDENTICAL TO THE BUYER PROPOSAL OR OTHERWISE.
3. ALL DIMENSIONS, TOLERANCES, LIMITS OF SIZE, FORM, LOCATION AND RELATED TERMINOLOGY AND SYMBOLS SHALL BE INTERPRETED IN ACCORDANCE WITH ASME Y14.5-2018.
4. THIS DRAWING IS TO BE READ IN CONJUCTION WITH ENGINEERING SPECIFICATION TBD.
5. THE LOAD CELL ASSEMBLY SHALL INCLUDE THE MINIMUM POSSIBLE NUMBER OF OPERATIONAL BEARING SURFACES.

6 CRITICAL ITEM. VENDOR SHALL MAINTAIN AS REQUIREMENT.

7. LOAD CELL SHALL INTERFACE WITH 24590-HLW-MJ-HEH-CRN-00003 CRANE HOOK 24590-QL-POA-MJKG-00002-08-01003.
8. LOAD CELL SHALL BE DESIGNED IN ACCORDANCE WITH ASME B30.26.
9. THE LOAD CELL READOUT SHALL BE DISPLAYED ON A BACKLIT DIGITAL DISPLAY WITH A 1 INCH MINIMUM CHARACTER HEIGHT AND READABLE VIA THE PTZ-XT-3018 AND/OR PTZ-XT-3020 CRANE MOUNTED CAMERA. THE DISPLAY SHALL BE FIVE DIGITS.
10. THE SELLER SHALL SUPPLY A CALIBRATION CERTIFICATE AND DOCUMENTATION ESTABLISHING TRACEABILITY OF THE LOAD CELL CALIBRATION TO NIST (NATIONAL INSTITUTE OF STANDARDS AND TECHNOLOGY.

11 ITEM 5 CONNECTS ABOVE TO THE CRANE HOIST BLOCK POWER CONNECTOR VIA TLM TO SUPPLY POWER TO THE LOAD CELL.

COMPONENT TAG NUMBER: 24590-HLW-MH-HEH-MHAN-00013
COMPONENT TAG NUMBER: 24590-HLW-MH-HEH-MHAN-00014

DRAWING INDEX	
DWG NO.	TITLE
24590-HLW-M0-HEH-00031001	HLW VIT SYS HEH DPD CANISTER GRAPPLE LOAD CELL ASSEMBLY

REFERENCE DRAWINGS	
DWG NO.	TITLE
24590-QL-POA-MJKG-00002-08-01003	DRAWING - 6 TON T/R CRANE NUMBER 2799 HOOK AND NUT DETAILS
24590-QL-POA-FH00-00001-03-00007	HLW VITRIFICATION DESIGN PROPOSAL DRAWING MECHANICAL SEQUENCE CANISTER GRAPPLE
24590-QL-POA-MJKG-00002-08-01026	DRAWING - 6 TON T/R CRANE NUMBER 2799 - LOWER BLOCK ASSEMBLY

CM
QUALITY DESIGNATOR

REV	DESCRIPTION	ORG	CHKD	RVWD	APVD	DATE
0	ISSUED FOR PROCUREMENT	JJH	JOV	IMK	JES	5/13/2024

REVISION HISTORY

Originator
By: Jacob Hayes - jjhayes
Org Name: Mechanical Handling
Dspcd: May 09, 2024

Checked
By: Jacob VanBlaricom - jovanbla
Org Name: HLW - Mechanical Handling
Dspcd: May 09, 2024

Reviewed No Comments
By: Ian Kincaid - ikincaid
Org Name: Mechanical Handling
Dspcd: May 10, 2024

Approved
By: Jason Schaeffer - jschaeff2
Org Name: HLW - Mechanical Handling
Dspcd: May 20, 2024

DO NOT SCALE DRAWING

THIRD ANGLE PROJECTION

UNLESS OTHERWISE SPECIFIED DIMENSIONS ARE IN INCHES

TOLERANCES UNLESS SPECIFIED

NO TOLERANCES ARE APPLIED TO DIMENSIONS UNLESS NOTED

WEIGHT 64.4 LBS

SUPPLIER DWG NO.

ISSUED BY RPP-WTP PDC

ISSUE STAMP

PROJECT No.	24590	
SITE	HANFORD	
AREA	200E	
BUILDING No.	30 (HLW)	
BY		DATE
ORIGINATOR	J. HAYES	5/9/2024
CHECKER	J. VANBLARICOM	5/9/2024
REVIEWER	I. KINCAID	5/10/2024
APPROVER	J. SCHAEFFER	5/13/2024

CONTENT APPLICABLE TO ALARA? [X] YES [ ] NO

ADR NO. N/A REV:

BECHTEL

RIVER PROTECTION PROJECT
WASTE TREATMENT PLANT
450 HILLS STREET
RICHLAND, WA 99354

CONTRACT No: DE-AC27-01RV14136 WTP SUBCONTRACT No:

HLW VITRIFICATION SYSTEM HEH DESIGN PROPOSAL DRAWING CANISTER GRAPPLE LOAD CELL ASSEMBLY

SCALE: 1:4

24590-HLW-M0-HEH-00031001

REV 0

LAST SAVED BY: jjhayes
FILE NAME: 24590-HLW-M0-HEH-00031
DATE: 5/9/2024 2:34:06 PM

FORMAT WTP ANSI INCH SIZE D (22x34)

'D' SIZE - 22in*34in
COMPUTER GENERATED - MANUAL
DESIGN CHANGES NOT PERMITTED

NOTES:

1. ALL DIMENSIONS, TOLERANCES, LIMITS OF SIZE, FORM, LOCATION AND RELATED TERMINOLOGY AND SYMBOLS SHALL BE INTERPRETED IN ACCORDANCE WITH ASME Y14.5-2018
2. THE GRAPPLE SHALL OPERATE BY MECHANICAL MEANS ONLY. DESIGN SHALL REQUIRE (2) SETDOWNS TO ALLOW COMPLETE RELEASE OF THE LOAD.
3. THE GRAPPLE SHALL HAVE A CLEARLY VISIBLE SEQUENCE INDICATOR. THE INDICATOR WILL SHOW THE FOLLOWING STATUS:
   A. GRAPPLE ENGAGED
   B. GRAPPLE FIRST SET DOWN
   C. GRAPPLE SECOND SET DOWN
4. MARKINGS PER DOE/RL-92-36 HOISTING AND RIGGING MANUAL.
5. DESIGN AND TESTING SHALL BE IN ACCORDANCE WITH ASME NQA-1.
6. BREAK ALL SHARP EDGES AND REMOVE ALL BURRS.
7. UNLESS OTHERWISE SPECIFIED, MACHINED SURFACE FINISH SHALL BE 125 MICROINCHES.
8. WELD IN ACCORDANCE WITH AWS D1.6.
9. DESIGN AS A BELOW THE HOOK LIFTING DEVICE PER ASME B30.20 AND BTH-1 WITH A DESIGN CATEGORY OF "B" AND SERVICE CLASS 0
10. THIS DRAWING IS TO BE READ IN CONJUCTION WITH ENGINEERING SPECIFICATION PROVIDED IN PURCHASE ORDER.
11. TORQUE ALL FASTENERS ACCORDING TO THE SUPPLIED TORQUE TABLE. IF A SIZE USED IS NOT AVAILABLE IN THE TABLE, USE AN ACCEPTED TORQUE-TIGHTENING FORMULA AND VERIFY WITH BUYER.
12. FOR CALCULATIONS OF EQUIPMENT WEIGHT, CENTER OF GRAVITY, AND WHEEL LOADS, SEE CALCULATION NO. 24590-HLW-M0C-M37T-00010.
13. THE CONTENTS OF THIS DRAWING IS WASTE ACCEPTANCE IMPACTING (WAI). REFER TO 24590-HLW-RPT-PR-01-001 AND 24590-HLW-WIQP-MH-09-0006.

DESCRIPTION	GRAPPLE PLANT ITEM NUMBER	CRANE PLANT ITEM NUMBER	ROOM NUMBER
CANISTER DECONTAMINATION CAVE CANISTER GRAPPLE (CLEAN)	24590-HLW-FH-HDH-TOOL-00001	24590-HLW-MJ-HDH-CRN-00005	H-0133
CANISTER DECONTAMINATION CAVE CANISTER GRAPPLE (DIRTY)	24590-HLW-FH-HDH-TOOL-00004	24590-HLW-MJ-HDH-CRN-00005	H-0133
CANISTER GRAPPLE CANISTER STORAGE CAVE	24590-HLW-FH-HEH-TOOL-00001	24590-HLW-MJ-HEH-CRN-00003	H-0132
THREE JAW GRAPPLE, CANISTER HANDLING CAVE, LOWER CRANE	24590-HLW-FH-HPH-TOOL-00001	24590-HLW-MJ-HPH-CRN-00001	H-0136
THREE JAW GRAPPLE, SPARE	24590-HLW-FH-HPH-TOOL-00018	N/A	H-0329A
MECHANICAL SEQUENCE GRAPPLE	24590-HLW-FH-HRH-TOOL-00002	24590-HLW-MJ-HRH-HST-00002	H-0135A
CANISTER GRAPPLE	24590-HLW-FH-HSH-TOOL-00004	24590-HLW-MJ-HSH-CRN-00001	H-0117
THREE JAW GRAPPLE, CANISTER HANDLING CAVE, UPPER CRANE	24590-HLW-FH-HPH-TOOL-00017	24590-HLW-MJ-HPH-CRN-00002	H-0136

STAINLESS STEEL TORQUE VALUES

BOLT SIZE	18-8 STAINLESS STEEL	316 STAINLESS STEEL
2-56	2.1 IN-LBS	2.2 IN-LBS
2-64	2.6 IN-LBS	2.7 IN-LBS
4-40	4.4 IN-LBS	4.7 IN-LBS
4-48	5.6 IN-LBS	5.9 IN-LBS
5-40	6.5 IN-LBS	6.9 IN-LBS
5-44	8.0 IN-LBS	8.3 IN-LBS
6-32	8.2 IN-LBS	8.6 IN-LBS
6-40	10.3 IN-LBS	10.8 IN-LBS
8-32	16.8 IN-LBS	17.6 IN-LBS
8-36	18.7 IN-LBS	19.6 IN-LBS
10-24	19.4 IN-LBS	20.2 IN-LBS
10-32	26.9 IN-LBS	28.1 IN-LBS
1/4-20	63.9 IN-LBS	67 IN-LBS
1/4-28	80 IN-LBS	84 IN-LBS
5/16-18	112 IN-LBS	117 IN-LBS
5/16-24	121 IN-LBS	125 IN-LBS
3/8-16	201 IN-LBS	210 IN-LBS
3/8-24	220 IN-LBS	230 IN-LBS
7/16-14	320 IN-LBS	334 IN-LBS
7/16-20	340 IN-LBS	355 IN-LBS
1/2-13	37 FT-LBS	38 FT-LBS
1/2-20	38 FT-LBS	40 FT-LBS
9/16-12	48 FT-LBS	50 FT-LBS
9/16-18	53 FT-LBS	55 FT-LBS
5/8-11	78 FT-LBS	82 FT-LBS
5/8-18	88 FT-LBS	92 FT-LBS
3/4-10	108 FT-LBS	111 FT-LBS
3/4-16	105 FT-LBS	110 FT-LBS
7/8-9	165 FT-LBS	172 FT-LBS
7/8-14	164 FT-LBS	171 FT-LBS
1-8	243 FT-LBS	254 FT-LBS
1-14	220 FT-LBS	230 FT-LBS
1 1/8-7	351 FT-LBS	367 FT-LBS
1 1/8-12	332 FT-LBS	347 FT-LBS
1 1/4-7	445 FT-LBS	464 FT-LBS
1 1/4-12	408 FT-LBS	428 FT-LBS
1 1/2-6	755 FT-LBS	791 FT-LBS
1 1/2-12	598 FT-LBS	622 FT-LBS

BILL OF MATERIALS

ITEM	QTY	DESCRIPTION	RAW MATERIAL	DOCUMENT NUMBER	MATERIAL	WEIGHT (LBS)
1	3	LIFTING ARM POSITION INDICATOR - UPPER LINKAGE	PLT .50 X 7.250 X .750	24590-HLW-MX-30-00011005	AISI 316L	0.7
2	3	LOWER LINKAGE PIN	RD BAR Ø.375 X 1.44	24590-HLW-MX-30-00011005	AISI 316L	0.0
3	3	LIFTING ARM LINKAGE PIN	RD BAR Ø.375 X 1.75	24590-HLW-MX-30-00011005	AISI 316L	0.1
4	3	LIFTING ARM POSITION INDICATOR - LOWER LINKAGE	PLT .500 X 2.625 X .750	24590-HLW-MX-30-00011005	AISI 316L	0.3
5	6	2 3/4" LINKAGE PIN	RD BAR Ø1.000 X 2.750	24590-HLW-MX-30-00011005	17-4 PH H1150	0.6
6	3	LIFTING ARM POSITION INDICATOR - CLAMP	SQ BAR 1.25 X 1.000	24590-HLW-MX-30-00011006	AISI 316L	0.4
7	6	3" LINKAGE PIN	RD BAR Ø1.000 X 3.000	24590-HLW-MX-30-00011006	17-4 PH H1150	0.7
8	3	MANUAL RELEASE PINS	RD BAR Ø2.000X 6.000	24590-HLW-MX-30-00011006	17-4 PH H1150	1.6
9	1	CAM GEAR BUSHING	RD BAR Ø2.000 X .350	24590-HLW-MX-30-00011006	SAE 660 BRONZE	0.2
10	1	CAM KEEPER PLATE	RD BAR Ø1.750 X .219	24590-HLW-MX-30-00011006	AISI 316L	0.1
11	1	GRAPPLE BASE ASSEMBLY		24590-HLW-MX-30-00012001		146.4
12	1	UPPER SLIDING TUBE		24590-HLW-MX-30-00013001		79.6
13	1	UPPER LIFTING FRAME		24590-HLW-MX-30-00014001		130.4
14	3	LIFTING ARM ASSEMBLY		24590-HLW-MX-30-00015001		22.6
15	3	CANISTER POSITION INDICATOR		24590-HLW-MX-30-00016001		0.9
16	6	LIFTING ARM LINKAGE	PLT .500 X 4.469 X 2.000	24590-HLW-MX-30-00017001	AISI 316L	1.4
17	3	CAM FOLLOWER ASSEMBLY		24590-HLW-MX-30-00018001		0.9
18	1	VERTICAL CAM SHAFT ASSEMBLY		24590-HLW-MX-30-00019001		59.1
19	1	LIFTING SHACKLE ASSEMBLY		24590-HLW-MX-30-00020001		155.2
20	1	GRAPPLE DECON DEFLECTION SHIELD WELDMENT		24590-HLW-MX-30-00021001		17.2
21	2	STATUS INDICATOR ASSEMBLY		24590-HLW-MX-30-00022001		11.0
22	3	LIFTING ARM POSITION INDICATOR		24590-HLW-MX-30-00023001		0.7
23	3	GRAPPLE ASSEMBLY SPACER ROD	RD BAR Ø.750 X 20.500	24590-HLW-MX-30-00025001	AISI 316L	2.5
24	1	DRIVE GEAR	RD BAR Ø2.500 X .875	24590-HLW-MX-30-00027001	AISI 303	0.6
25	1	GRAPPLE LABEL	SHT .063 X 6.000 X 2.250	24590-HLW-MX-30-00028001	AISI 316L	0.2
26	6	SHAFT COLLAR: 3/8" DIA			AISI 316	0.04
27	24	EXTERNAL RETAINING RING SH-100ST			STAINLESS STEEL	0.0
28	12	EXTERNAL RETAINING RING SH-37ST			STAINLESS STEEL	0.0
29	24	FLAT WASHER 1 TYPE A NARROW 18-8 SS		-	18-8 STAINLESS STEEL	0.1
30	12	FLAT WASHER 3/4 TYPE A NARROW 18-8 SS		-	18-8 STAINLESS STEEL	0.0
31	9	FLAT WASHER 3/8 TYPE A NARROW 18-8 SS		-	18-8 STAINLESS STEEL	0.0
32	3	FLAT WASHER 1/4 TYPE A NARROW 18-8 SS		-	18-8 STAINLESS STEEL	0.0
33	12	SPRING LOCK WASHER 1/4 REGULAR SS 316			AISI 316	0.0
34	12	SHCS 1/4-20 UNC X 1.00 LG F837 SS 316 PLAIN		-	AISI 316	0.0
35	12	FLEX LOCK HEX NUT 3/4-10 UNC SS 18-8 PLAIN			18-8 STAINLESS STEEL	0.2
36	3	SHSB 0.38 DIA X 0.63 LG X .313-18 UNC F837 SS 304 PLAIN		-	AISI 304	0.0
37	6	HSSS-CUP 5/16-18 UNC X 0.38 LG F880 SS 304 PLAIN			AISI 304	0.0
38	3	COMPRESSION SPRING: 3" X 0.688" OD X 0.594" ID			302 STAINLESS STEEL	0.04
39	4	QUICK-RELEASE PIN: 1/4" DIA. X 4", RING-GRIP			18-8 STAINLESS STEEL	0.067
40	3	HHCS 1/4-20 UNC X 2.25 LG SS 304 PLAIN		-	AISI 304	0.0
41	3	HEX NUT 1/4-20 UNC 18-8 SS			18-8 STAINLESS STEEL	0.0
42	1	SCREW: 3/8"-16 X 1" 82º COUNTERSUNK HEX DRIVE FLAT HEAD			18-8 STAINLESS STEEL	0.00
43	4	BHCS #10-24 UNC X 0.38 LG F879 SS 304 PLAIN			AISI 304	0.0

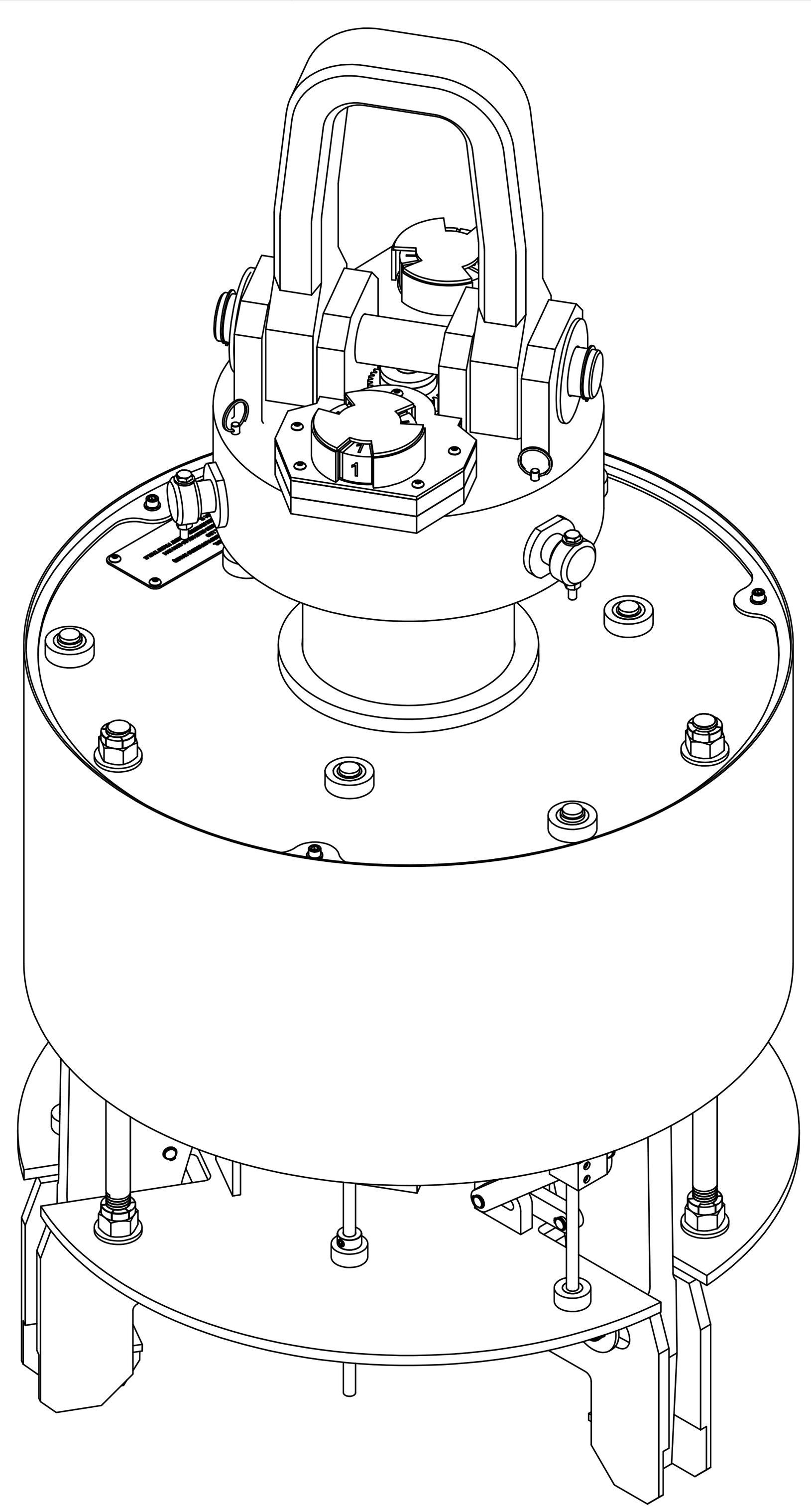

DRAWING INDEX

DWG NO.	TITLE
24590-HLW-MX-30-00011001	HLW VIT SYS FAB DWG GRAPPLE ASSY
24590-HLW-MX-30-00011002	HLW VIT SYS FAB DWG GRAPPLE ASSY DETAILS
24590-HLW-MX-30-00011003	HLW VIT SYS FAB DWG GRAPPLE ASSY OPERATION MODES
24590-HLW-MX-30-00011004	HLW VIT SYS FAB DWG GRAPPLE ASSY CANISTER INTERACTION
24590-HLW-MX-30-00011005	HLW VIT SYS FAB DWG GRAPPLE ASSY DETAILS
24590-HLW-MX-30-00011006	HLW VIT SYS FAB DWG GRAPPLE ASSY DETAILS

REFERENCE DRAWINGS

DWG NO.	TITLE
24590-HLW-MX-30-00010001	HLW VIT CANISTER ASSY DWG (3/8" WALL)
24590-QL-POA-MJKG-00002-08-00896	6 TON T/R CRANE NUMBER 2797 - HOOK AND NUT DETAILS
24590-QL-POA-MJKG-00002-08-00791	6 TON T/R CRANE NUMBER 2796 - HOOK AND NUT DETAILS
24590-QL-POA-MJKG-00002-08-00583	6 TON T/R CRANE NUMBER 2798 HOOK AND NUT DETAILS
24590-QL-POA-MJKG-00002-08-01003	6 TON T/R CRANE NUMBER 2799 HOOK AND NUT DETAILS
24590-QL-POA-MJKG-00002-08-01834	25 TON T/R CRANE NUMBER 2795 HOOK AND NUT DETAILS
24590-HLW-M0-30-00013001	HLW VITRIFICATION DESIGN PROPOSAL DRAWING HLW CANISTER GRAPPLE STAND DETAIL

Reviewed No Comments
By: Ian Kincaid - ikincaid
Org Name: HLW - Mechanical Handling
Placed: Sep 06, 2024

Checked
By: Kenneth D. Draper - kddraper
Org Name: HLW Mechanical Handling
Placed: Sep 06, 2024

Originator
By: Lanny Lancaster - llancast
Org Name: HLW Mechanical Handling
Placed: Sep 06, 2024

Approved
By: Jason Schaeffer - jschaef2
Org Name: HLW - Mechanical Handling
Placed: Sep 06, 2024

Q
QUALITY DESIGNATOR

REV	DESCRIPTION	ORG	CHKD	RVWD	APVD	DATE
0	ISSUED FOR PROCUREMENT	LPL	KDD	IMK	JES	9/6/2024

REVISION HISTORY

DO NOT SCALE DRAWING

THIRD ANGLE PROJECTION

UNLESS OTHERWISE SPECIFIED DIMENSIONS ARE IN INCHES

TOLERANCES UNLESS SPECIFIED

X.X	± .1
X.XX	± .03
X.XXX	± .005
FRACTIONS	± 1/16"
ANGLES	± .5˚

WEIGHT 725.4 LBS

SUPPLIER DWG NO.

Issued By RPP-WTP PDC

ISSUE STAMP

PROJECT No.	24590
SITE	HANFORD
AREA	200E
BUILDING No.	30 (HLW)

	BY	DATE
ORIGINATOR	L. LANCASTER	9/6/2024
CHECKER	K. DRAPER	9/6/2024
REVIEWER	I. KINCAID	9/6/2024
APPROVER	J. SCHAEFFER	9/6/2024

CONTENT APPLICABLE TO ALARA? [X] YES [ ] NO

ADR NO. 24590-HLW-ADR-M-24-0011 REV: 0

RIVER PROTECTION PROJECT
WASTE TREATMENT PLANT
450 HILLS STREET
RICHLAND, WA 99354

CONTRACT No: DE-AC27-01RV14136 WTP SUBCONTRACT No:

HLW VITRIFICATION SYSTEM FABRICATION DRAWING GRAPPLE ASSEMBLY

SCALE: 1:5

24590-HLW-MX-30-00011001

REV 0

LAST SAVED BY: llancast
FILE NAME: 24590-HLW-MX-30-00011
DATE: 8/23/2024 1:22:20 PM

FORMAT WTP ANSI INCH SIZE D (22x34)

'D' SIZE - 22in*34in
COMPUTER GENERATED - MANUAL DESIGN CHANGES NOT PERMITTED

NOTES:

FOR NOTES, DRAWING INDEX, REFERENCE DRAWINGS AND PART/MATERIAL LISTS, SEE 24590-HLW-MX-30-00011001.

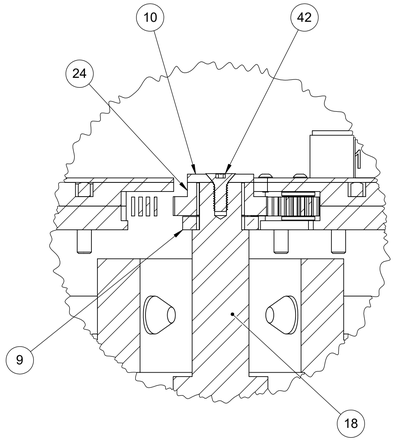

DETAIL E
SCALE 1 : 2

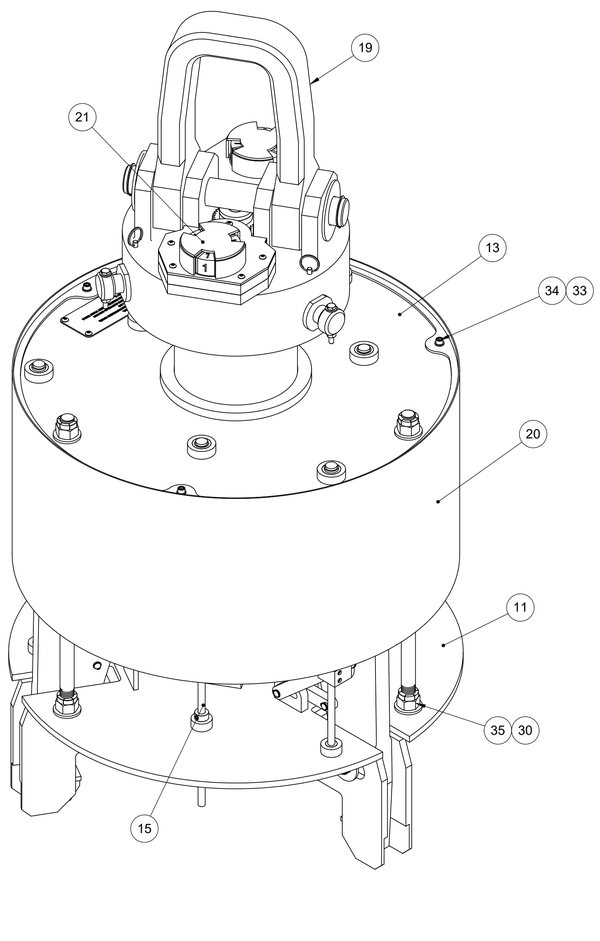

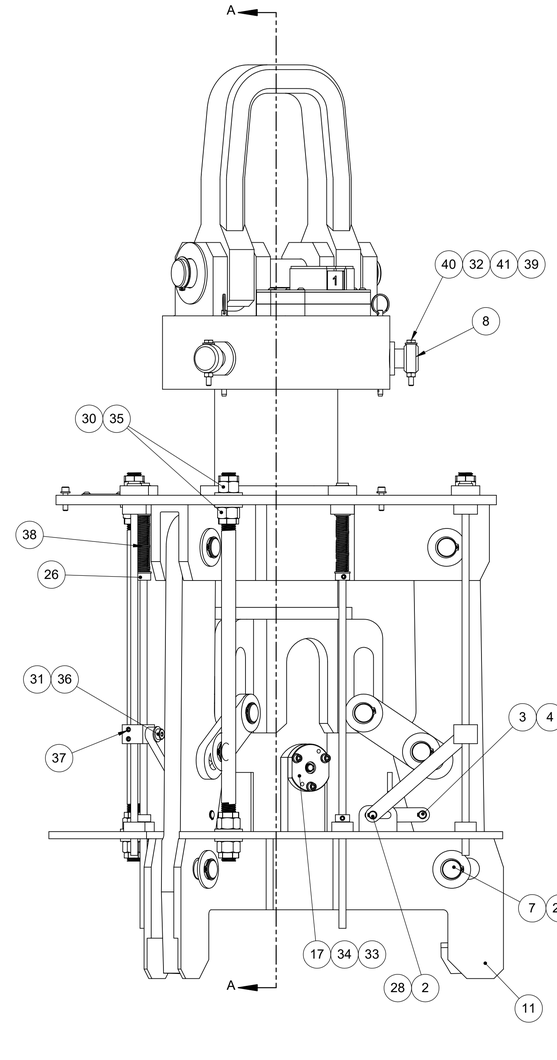

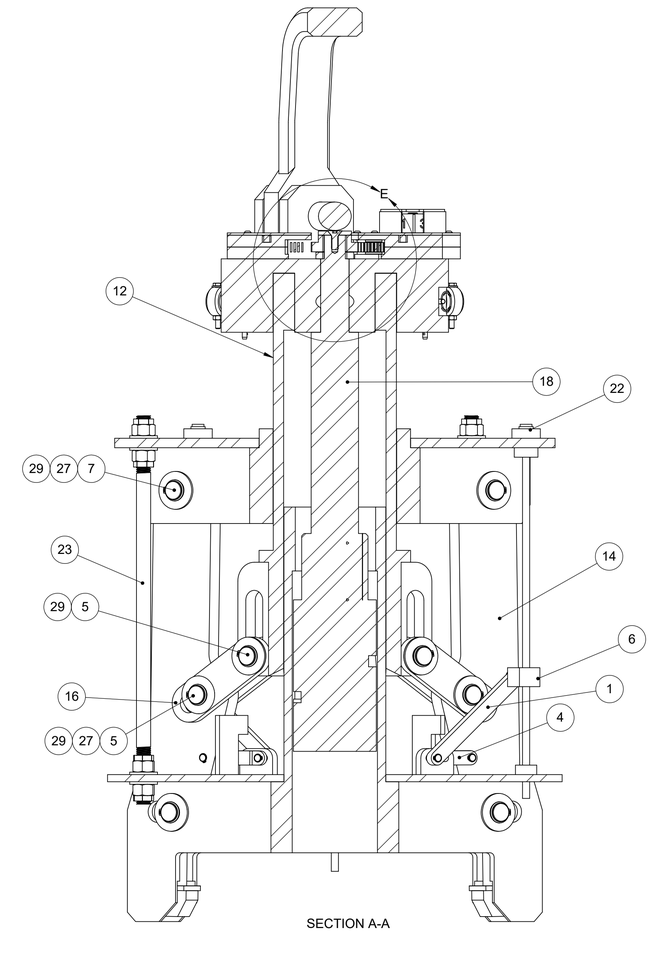

SECTION A-A

REV	DESCRIPTION	ORG	CHKD	RVWD	APVD	DATE
0	ISSUED FOR PROCUREMENT	LPL	KDD	IMK	JES	9/6/2024

Q QUALITY DESIGNATOR

REVISION HISTORY

Originator By: Lanny Lancaster - llancast Org Name: HLW Mechanical Handling Placed: Sep 06, 2024

Checked By: Kenneth D. Draper - kddraper Org Name: HLW Mechanical Handling Placed: Sep 06, 2024

Reviewed No Comments Org Name: HLW - Mechanical Handling Placed: Sep 06, 2024

Approved By: Jason Schaeffer - jschaef2 Org Name: HLW - Mechanical Handling Placed: Sep 06, 2024

DO NOT SCALE DRAWING

THIRD ANGLE PROJECTION

UNLESS OTHERWISE SPECIFIED DIMENSIONS ARE IN INCHES

TOLERANCES UNLESS SPECIFIED

X.X	± .1
X.XX	± .03
X.XXX	± .005
FRACTIONS	± 1/16"
ANGLES	± .5°

WEIGHT 725.4 LBS

SUPPLIER DWG NO.

Issued By RPP-WTP PDC

ISSUE STAMP

PROJECT No.	24590
SITE	HANFORD
AREA	200E
BUILDING No.	30 (HLW)

	BY	DATE
ORIGINATOR	L. LANCASTER	9/6/2024
CHECKER	K. DRAPER	9/6/2024
REVIEWER	I. KINCAID	9/6/2024
APPROVER	J. SCHAEFFER	9/6/2024

CONTENT APPLICABLE TO ALARA? [X] YES [ ] NO

ADR NO. 24590-HLW-ADR-M-24-0011 REV: 0

BECHTEL

RIVER PROTECTION PROJECT
WASTE TREATMENT PLANT
450 HILLS STREET
RICHLAND, WA 99354

CONTRACT No: DE-AC27-01RV14136 WTP SUBCONTRACT No:

HLW VITRIFICATION SYSTEM FABRICATION DRAWING GRAPPLE ASSEMBLY DETAILS

SCALE: 1:5

24590-HLW-MX-30-00011002

REV 0

LAST SAVED BY: llancast
FILE NAME: 24590-HLW-MX-30-00011
DATE: 8/23/2024 1:22:20 PM

NOTES:

FOR NOTES, DRAWING INDEX, REFERENCE DRAWINGS AND PART/MATERIAL LISTS, SEE 24590-HLW-MX-30-00011001.

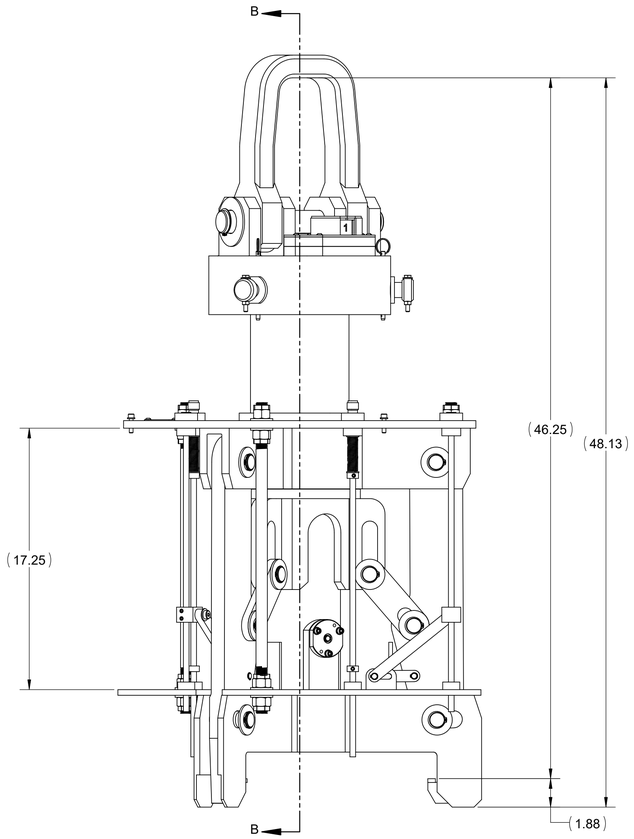

OPERATION: CLOSED

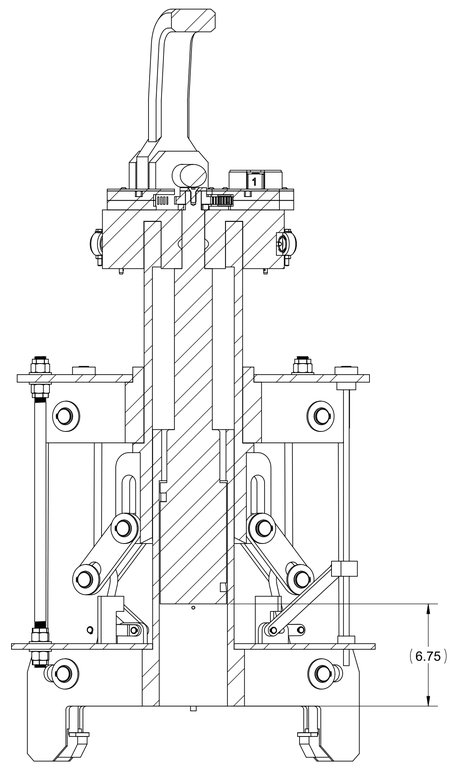

SECTION B-B

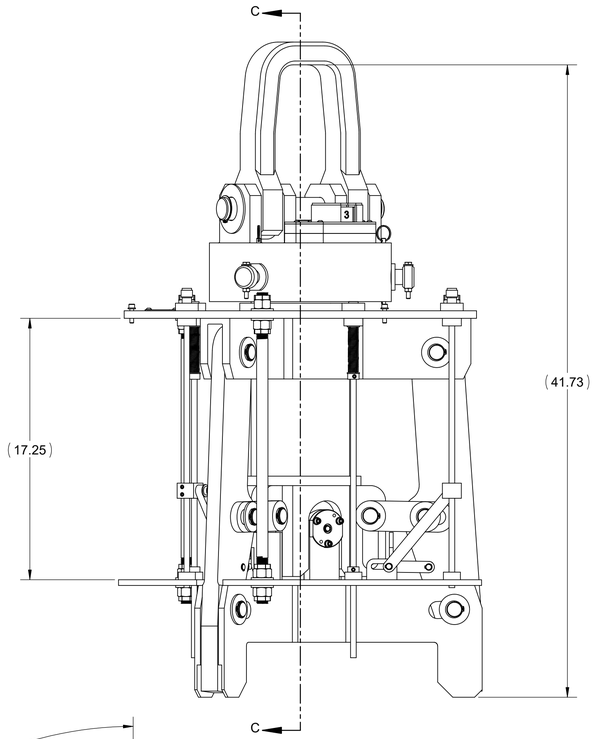

OPERATION: OPEN

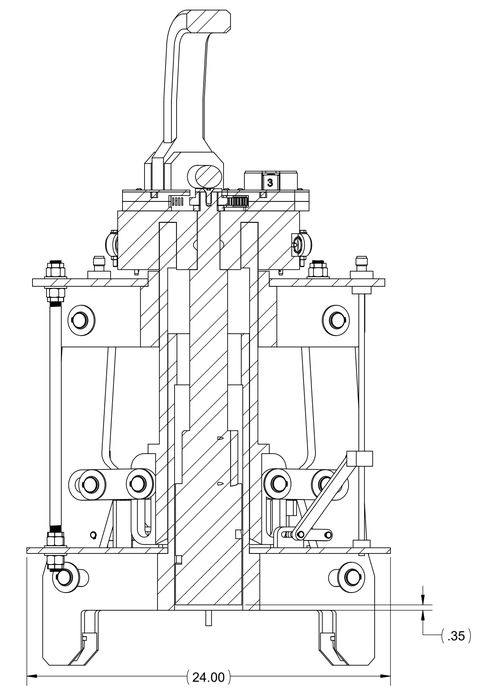

SECTION C-C

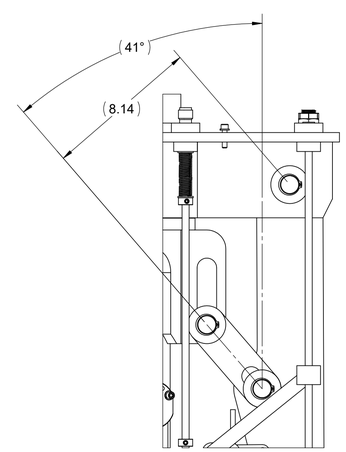

ANGLE AND DISTANCE OF LINKAGE WHEN GRAPPLE IS IN CLOSED POSITION

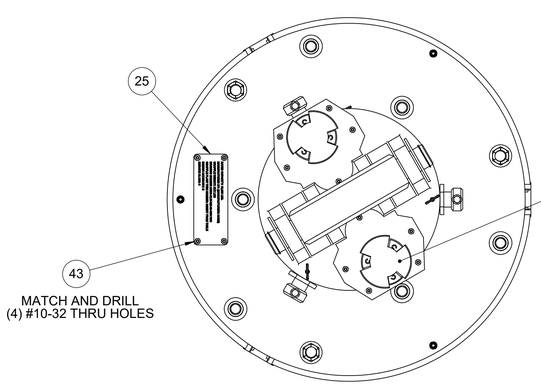

MATCH AND DRILL
(4) #10-32 THRU HOLES

GRAPPLE STATUS INDICATOR - EACH TOP FACE AND SIDE FACE OF CYLINDER SHALL BE PAINTED AND ENGRAVED WITH A CORRESPONDING NUMBER WHICH WILL PROVIDE VISUAL INDICATION OF GRAPPLE STATUS WHEN ALIGNED WITH CUT OUT IN HOUSING COVER CAP

GRAPPLE STATUS INDICATION INFORMATION:

GREEN (1) = GRAPPLE ENGAGED
YELLOW (2) = FIRST SET-DOWN
RED (3) = SECOND SET DOWN (FULLY RELEASED)

Q QUALITY DESIGNATOR						
0	ISSUED FOR PROCUREMENT	LPL	KDD	IMK	JES	9/6/2024
REV	DESCRIPTION	ORG	CHKD	RVWD	APVD	DATE

REVISION HISTORY

DO NOT SCALE DRAWING

THIRD ANGLE PROJECTION

UNLESS OTHERWISE SPECIFIED DIMENSIONS ARE IN INCHES

TOLERANCES UNLESS SPECIFIED

X.X	± .1
X.XX	± .03
X.XXX	± .005
FRACTIONS	± 1/16"
ANGLES	± .5°

WEIGHT 708.2 LBS

SUPPLIER DWG NO.

Issued By RPP-WTP PDC

ISSUE STAMP

PROJECT No.	24590	
SITE	HANFORD	
AREA	200E	
BUILDING No.	30 (HLW)	
	BY	DATE
ORIGINATOR	L. LANCASTER	9/6/2024
CHECKER	K. DRAPER	9/6/2024
REVIEWER	I. KINCAID	9/6/2024
APPROVER	J. SCHAEFFER	9/6/2024

CONTENT APPLICABLE TO ALARA? [X] YES [ ] NO

ADR NO. 24590-HLW-ADR-M-24-0011 REV: 0

Originator By: Lanny Lancaster - llancast Org Name: HLW Mechanical Handling Placed: Sep 06, 2024

Checked By: Kenneth D. Draper - kddraper Org Name: HLW Mechanical Handling Placed: Sep 06, 2024

Reviewed No Comments By: Ian Kincaid - iankincaid Org Name: HLW - Mechanical Handling Placed: Sep 06, 2024

Approved By: Jesse Schaeffer - jschaef2 Org Name: HLW - Mechanical Handling Placed: Sep 06, 2024

BECHTEL

RIVER PROTECTION PROJECT
WASTE TREATMENT PLANT
450 HILLS STREET
RICHLAND, WA 99354

CONTRACT No: DE-AC27-01RV14136 WTP SUBCONTRACT No:

HLW VITRIFICATION SYSTEM FABRICATION DRAWING GRAPPLE ASSEMBLY OPERATION MODES

SCALE: 1:5

24590-HLW-MX-30-00011003

REV 0

LAST SAVED BY: llancast
FILE NAME: 24590-HLW-MX-30-00011
DATE: 9/23/2024 1:22:20 PM

NOTES:

FOR NOTES, DRAWING INDEX, REFERENCE DRAWINGS AND PART/MATERIAL LISTS, SEE 24590-HLW-MX-30-00011001.

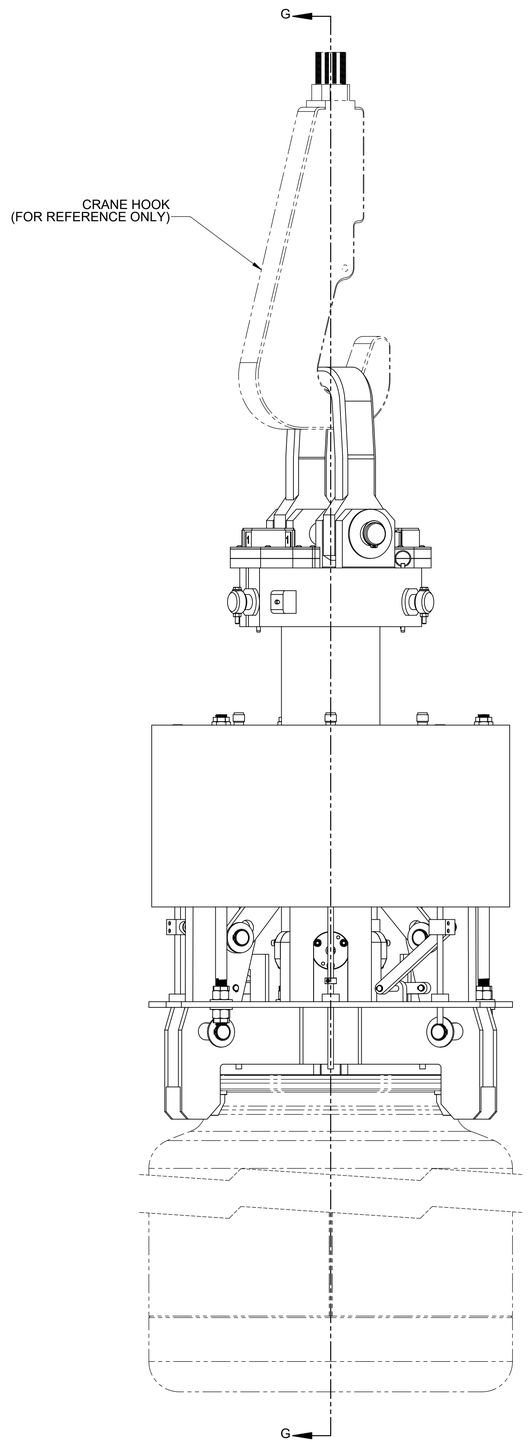

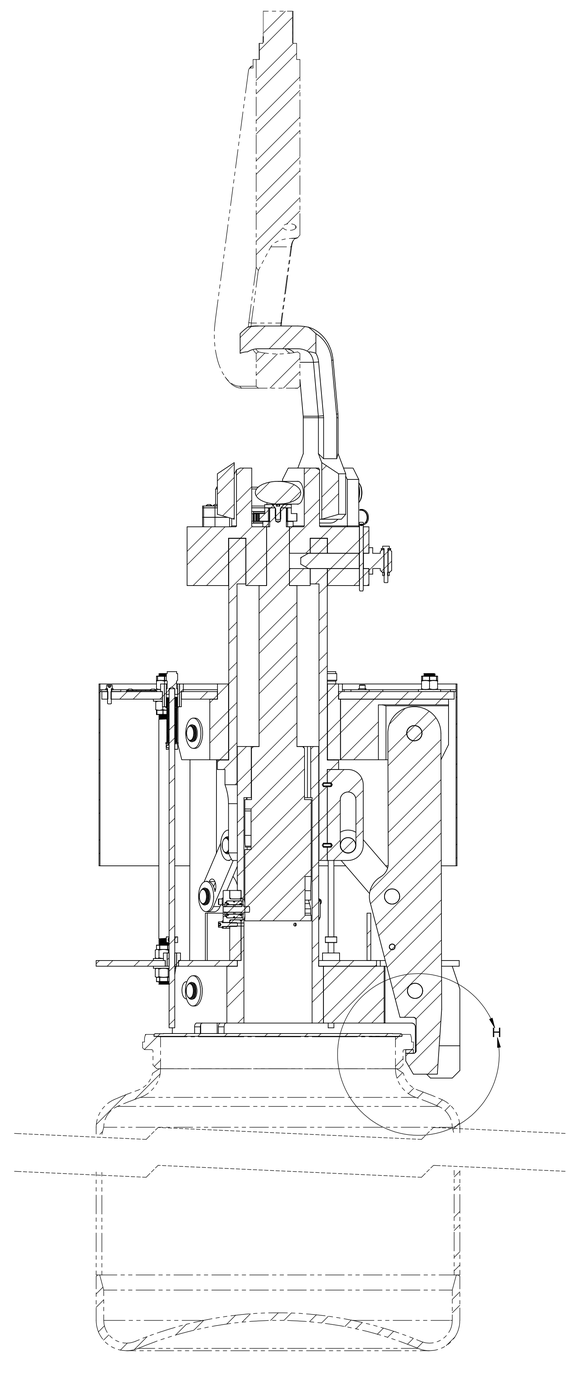

SECTION G-G

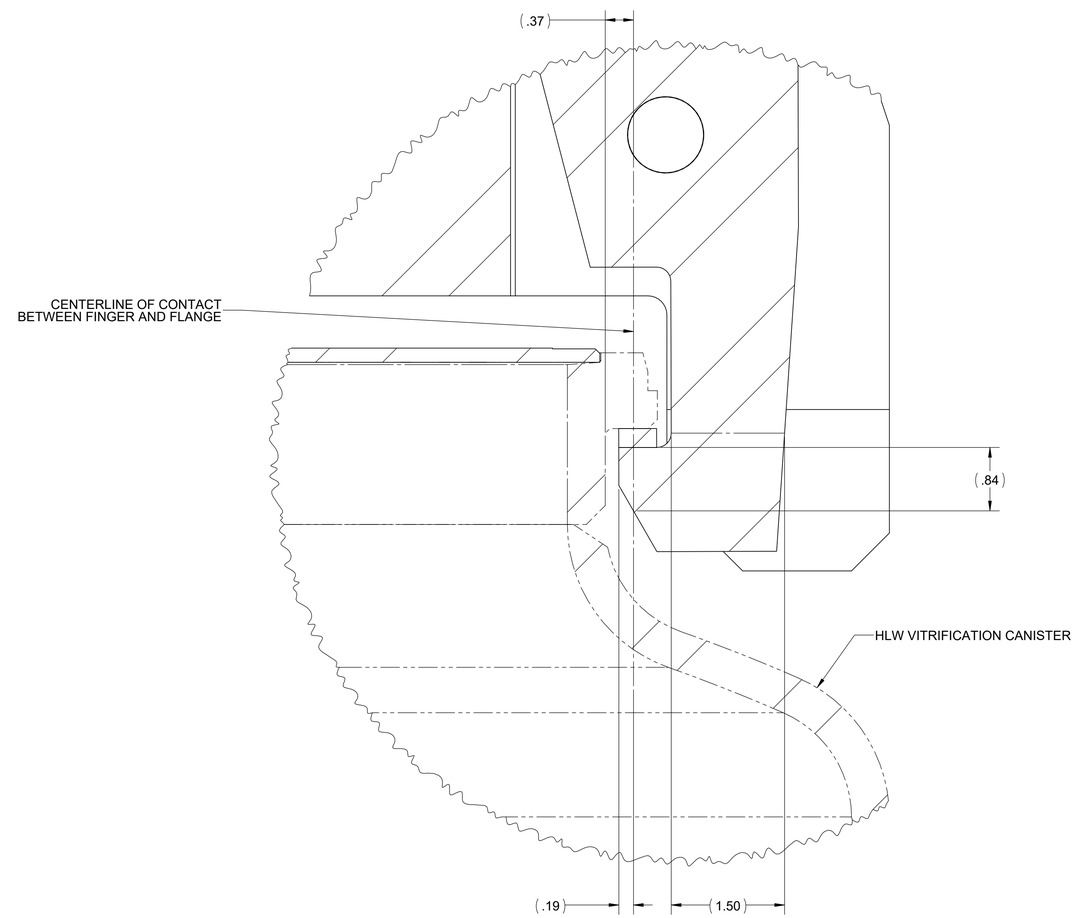

DETAIL H
SCALE 1 : 1

Reviewed No Comments — By: Ian Kincaid - ikincaid — Org Name: HLW - Mechanical Handling — Signed: Aug 23, 2024

Approved — By: Jason Schaeffer - jschaef2 — Org Name: HLW - Mechanical Handling — Signed: Sep 06, 2024

Checked — By: Kenneth D. Draper - kddraper — Org Name: HLW Mechanical Handling — Signed: Aug 22, 2024

Originator — By: Larry Lancaster - llancast — Org Name: HLW Mechanical Handling — Signed: Aug 22, 2024

QUALITY DESIGNATOR: Q

REV	DESCRIPTION	ORG	CHKD	RVWD	APVD	DATE
0	ISSUED FOR PROCUREMENT	LPL	KDD	IMK	JES	9/04/2024

REVISION HISTORY

DO NOT SCALE DRAWING

THIRD ANGLE PROJECTION

UNLESS OTHERWISE SPECIFIED DIMENSIONS ARE IN INCHES

TOLERANCES UNLESS SPECIFIED

X.X	± .1
X.XX	± .03
X.XXX	± .005
FRACTIONS	± 1/16"
ANGLES	± .5°

WEIGHT 725.4 LBS

SUPPLIER DWG NO.

Issued By RPP-WTP PDC

ISSUE STAMP

PROJECT No.	24590	
SITE	HANFORD	
AREA	200E	
BUILDING No.	30 (HLW)	
	BY	DATE
ORIGINATOR	L. LANCASTER	8/22/2024
CHECKER	K. DRAPER	8/22/2024
REVIEWER	I. KINCAID	8/23/2024
APPROVER	J. SCHAEFFER	9/04/2024

CONTENT APPLICABLE TO ALARA? [X] YES [ ] NO

ADR NO. 24590-HLW-ADR-M-24-0011 REV: 0

BECHTEL

RIVER PROTECTION PROJECT
WASTE TREATMENT PLANT
450 HILLS STREET
RICHLAND, WA 99354

CONTRACT No: DE-AC27-01RV14136 WTP SUBCONTRACT No:

HLW VITRIFICATION SYSTEM FABRICATION DRAWING GRAPPLE ASSEMBLY CANISTER INTERACTION

SCALE: 1:5

24590-HLW-MX-30-00011004

REV 0

LAST SAVED BY: llancast
FILE NAME: 24590-HLW-MX-30-00011
DATE: 8/21/2024 12:29:07 PM

FORMAT WTP ANSI INCH SIZE D (22x34)

'D' SIZE - 22in*34in
COMPUTER GENERATED - MANUAL
DESIGN CHANGES NOT PERMITTED

NOTES:

FOR NOTES, DRAWING INDEX, REFERENCE DRAWINGS AND PART/MATERIAL LISTS, SEE 24590-HLW-MX-30-00011001.

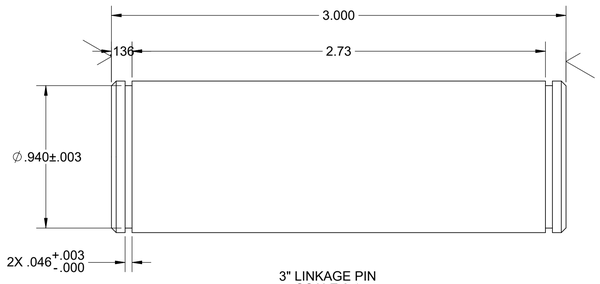

3" LINKAGE PIN
SCALE 2:1

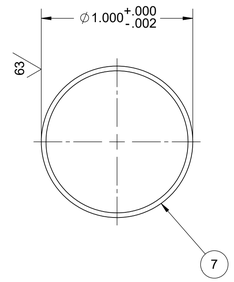

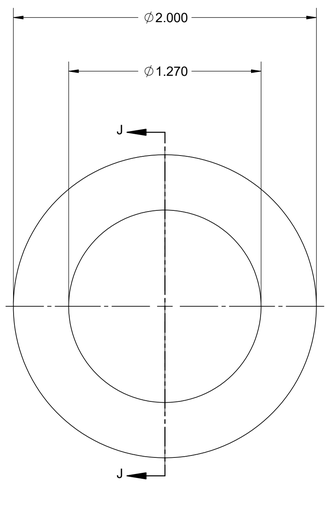

CAM GEAR BUSHING
SCALE 2:1

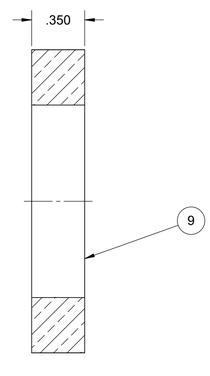

SECTION J-J
SCALE 2 : 1

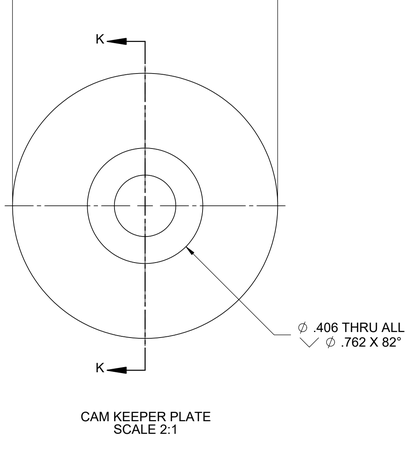

CAM KEEPER PLATE
SCALE 2:1

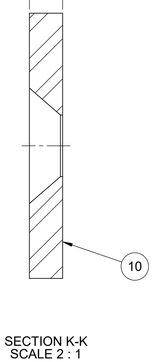

SECTION K-K
SCALE 2 : 1

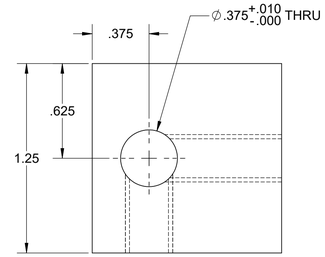

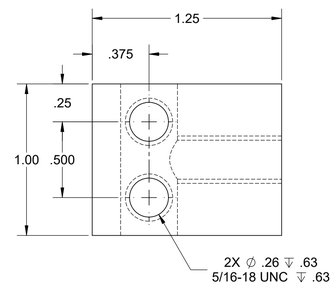

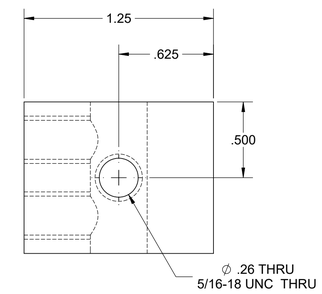

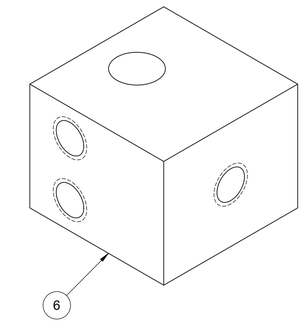

LIFTING ARM POSITION INDICATOR - CLAMP
SCALE 2:1

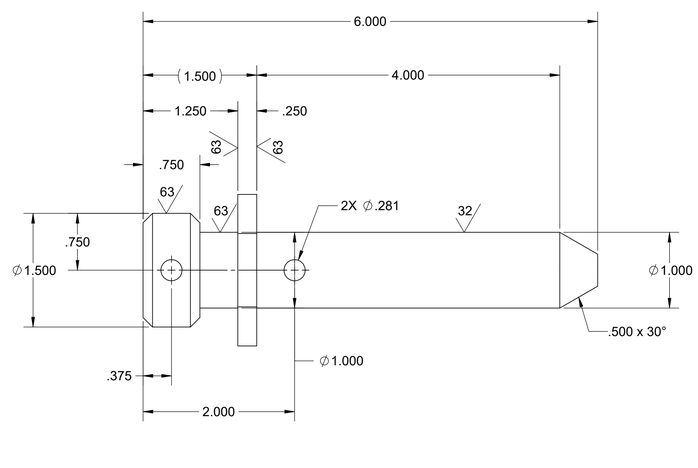

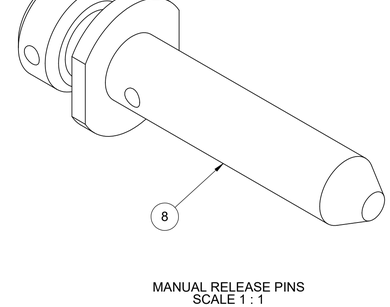

MANUAL RELEASE PINS
SCALE 1 : 1

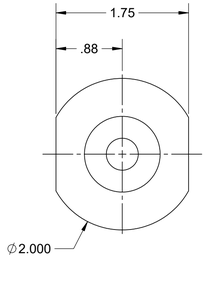

Reviewed No Comments — By: Kenneth D. Draper - kdraper — Org Name: HLW - Mechanical Handling — Placed: Aug 23, 2024

Approved — By: Jason Schaeffer - jschaef2 — Org Name: HLW - Mechanical Handling — Placed: Sep 06, 2024

Checked — By: Kenneth D. Draper - kdraper — Org Name: HLW Mechanical Handling — Placed: Aug 22, 2024

Originator — By: Lanny Lancaster - llancast — Org Name: HLW Mechanical Handling — Placed: Aug 22, 2024

Q — QUALITY DESIGNATOR

REV	DESCRIPTION	ORG	CHKD	RVWD	APVD	DATE
0	ISSUED FOR PROCUREMENT	LPL	KDD	IMK	JES	9/04/2024

REVISION HISTORY

DO NOT SCALE DRAWING

THIRD ANGLE PROJECTION

UNLESS OTHERWISE SPECIFIED DIMENSIONS ARE IN INCHES

TOLERANCES UNLESS SPECIFIED

X.X	± .1
X.XX	± .03
X.XXX	± .005
FRACTIONS	± 1/16"
ANGLES	± .5°

WEIGHT 725.4 LBS

SUPPLIER DWG NO.

Issued By RPP-WTP PDC

ISSUE STAMP

		BY	DATE
PROJECT No.	24590		
SITE	HANFORD		
AREA	200E		
BUILDING No.	30 (HLW)		
ORIGINATOR		L. LANCASTER	8/22/2024
CHECKER		K. DRAPER	8/22/2024
REVIEWER		I. KINCAID	8/23/2024
APPROVER		J. SCHAEFFER	9/04/2024

CONTENT APPLICABLE TO ALARA? [X] YES [ ] NO

ADR NO. 24590-HLW-ADR-M-24-0011 REV: 0

BECHTEL

RIVER PROTECTION PROJECT
WASTE TREATMENT PLANT
450 HILLS STREET
RICHLAND, WA 99354

CONTRACT No: DE-AC27-01RV14136 WTP SUBCONTRACT No:

HLW VITRIFICATION SYSTEM FABRICATION DRAWING GRAPPLE ASSEMBLY DETAILS

SCALE: 1:1

24590-HLW-MX-30-00011006

REV 0

LAST SAVED BY: llancast
FILE NAME: 24590-HLW-MX-30-00011
DATE: 8/21/2024 12:29:07 PM

BILL OF MATERIALS

ITEM	QTY	DESCRIPTION	RAW MATERIAL	DOCUMENT NUMBER	MATERIAL	WEIGHT (LBS)
1	1	CENTER BASE TUBE DETAIL	CORED BAR 6.750 OD X 3.000 ID X 18.250	24590-HLW-MX-30-00012002	AISI 316L	48.4
2	3	BASE GUIDE FOOT	PLT 2.250 X 9.000 X 7.380	24590-HLW-MX-30-00012003	AISI 316L	15.5
3	1	BASE PLATE	PLT .375 X 24.000 X 24.000	24590-HLW-MX-30-00012004	AISI 316L	42.4
4	3	CAM GUIDE MOUNTING REINF.	PLT .750 X 2.250 X 4.625	24590-HLW-MX-30-00012005	AISI 316L	1.8
5	3	LIFTING ARM LINKAGE SUPPORT	PLT .250 X 3.125 X 3.000	24590-HLW-MX-30-00012005	AISI 316L	0.5
6	3	LINKAGE MOUNT PLATE	PLT .500 X 2.000 X 1.375	24590-HLW-MX-30-00012005	AISI 316L	0.3
7	6	UPPER POSITION INDICATOR BUSING BUNG	RD BAR 1.125 X .875	24590-HLW-MX-30-00012005	AISI 316L	0.1
8	6	BUSHING, .375 ID X .625 OD X .875 LG		-	SAE 841 BRONZE	0.1
9	12	SPRING PIN, 1/4" X 1/2" LG			18-8 STAINLESS STEEL	0.00

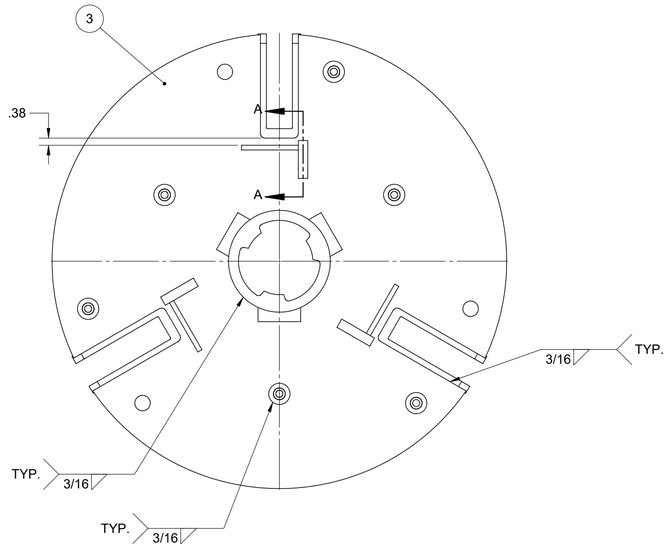

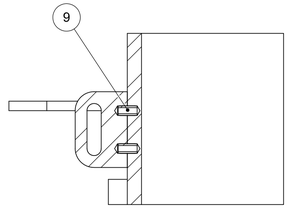

SECTION A-A
SCALE 1 : 2

NOTES:

1. ALL DIMENSIONS, TOLERANCES, LIMITS OF SIZE, FORM, LOCATION AND RELATED TERMINOLOGY AND SYMBOLS SHALL BE INTERPRETED IN ACCORDANCE WITH ASME Y14.5-2018
2. WELD IN ACCORDANCE WITH AWS D1.6.
3. BREAK ALL SHARP EDGES AND REMOVE ALL BURRS.
4. UNLESS OTHERWISE SPECIFIED, MACHINED SURFACE FINISH SHALL BE 125 MICROINCHES.
5. THE CONTENTS OF THIS DRAWING IS WASTE ACCEPTANCE IMPACTING (WAI). REFER TO 24590-HLW-RPT-PR-01-001 AND 24590-HLW-WIQP-MH-09-0006.

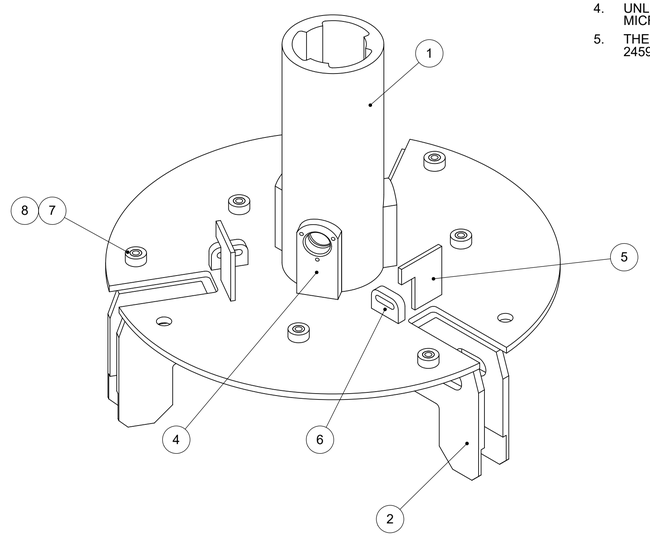

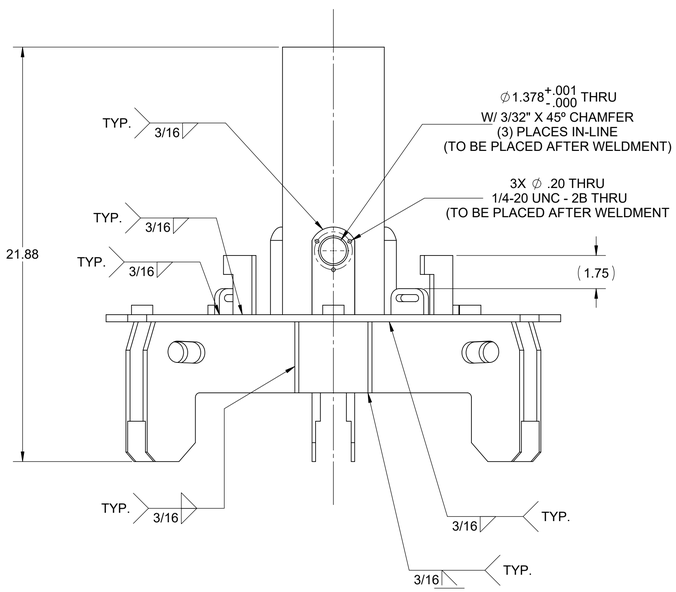

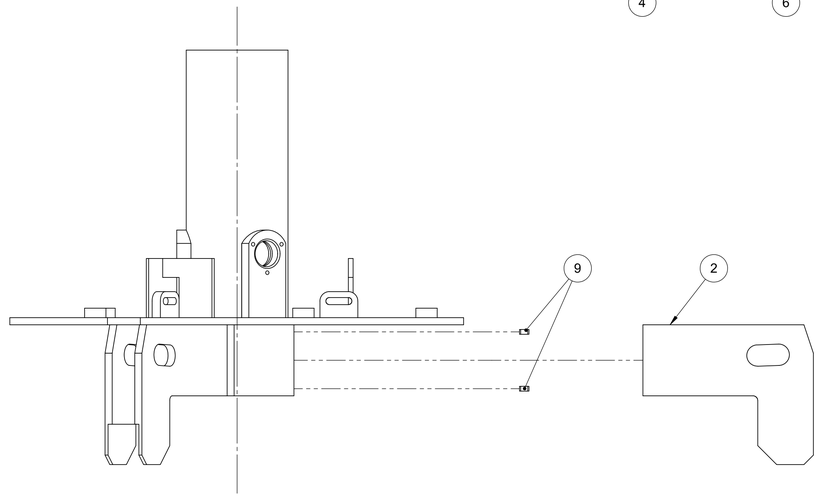

REFERENCE DRAWINGS	
DWG NO.	TITLE
24590-HLW-MX-30-00011001	HLW VIT SYS FAB DWG GRAPPLE ASSEMBLY

DRAWING INDEX	
DWG NO.	TITLE
24590-HLW-MX-30-00012001	HLW VIT SYS FAB DWG GRAPPLE BASE ASSEMBLY
24590-HLW-MX-30-00012002	HLW VIT SYS FAB DWG GRAPPLE BASE ASSY CENTER BASE TUBE DETAIL
24590-HLW-MX-30-00012003	HLW VIT SYS FAB DWG GRAPPLE BASE ASSY BASE GUIDE FOOT DETAIL
24590-HLW-MX-30-00012004	HLW VIT SYS FAB DWG GRAPPLE BASE ASSY BASE PLATE DETAIL
24590-HLW-MX-30-00012005	HLW VIT SYS FAB DWG GRAPPLE BASE ASSY DETAILS

Reviewed No Comments
By: Kenneth D. Draper - kddraper
Org Name: HLW - Mechanical Handling
Placed: Aug 23, 2024

Checked
By: Kenneth D. Draper - kddraper
Org Name: HLW Mechanical Handling
Placed: Aug 22, 2024

Approved
By: Jason Schaeffer - jschaef2
Org Name: HLW - Mechanical Handling
Placed: Sep 06, 2024

Originator
By: Lanny Lancaster - llancast
Org Name: HLW Mechanical Handling
Placed: Aug 22, 2024

Q
QUALITY DESIGNATOR

REV	DESCRIPTION	ORG	CHKD	RVWD	APVD	DATE
0	ISSUED FOR PROCUREMENT	LPL	KDD	IMK	JES	9/04/2024

REVISION HISTORY

DO NOT SCALE DRAWING

THIRD ANGLE PROJECTION

UNLESS OTHERWISE SPECIFIED DIMENSIONS ARE IN INCHES

TOLERANCES UNLESS SPECIFIED

X.X	± .1
X.XX	± .03
X.XXX	± .005
FRACTIONS	± 1/16"
ANGLES	± .5°

WEIGHT 146.4 LBS

SUPPLIER DWG NO.

ISSUED BY RPP-WTP PDC
ISSUE STAMP

PROJECT No.	24590	
SITE	HANFORD	
AREA	200E	
BUILDING No.	30 (HLW)	
	BY	DATE
ORIGINATOR	L. LANCASTER	8/22/2024
CHECKER	K. DRAPER	8/22/2024
REVIEWER	I. KINCAID	8/23/2024
APPROVER	J. SCHAEFFER	9/042024

CONTENT APPLICABLE TO ALARA? [X] YES [ ] NO
ADR NO. 24590-HLW-ADR-M-24-0011 REV: 0

BECHTEL

RIVER PROTECTION PROJECT
WASTE TREATMENT PLANT
450 HILLS STREET
RICHLAND, WA 99354

CONTRACT No: DE-AC27-01RV14136 WTP SUBCONTRACT No:

HLW VITRIFICATION SYSTEM FABRICATION DRAWING GRAPPLE BASE ASSEMBLY

SCALE: 1:3

24590-HLW-MX-30-00012001

REV 0

LAST SAVED BY: llancast
FILE NAME: 24590-HLW-MX-30-00012
DATE: 8/15/2024 12:30:28 PM

FORMAT WTP ANSI INCH SIZE D (22x34)

'D' SIZE - 22in*34in
COMPUTER GENERATED - MANUAL DESIGN CHANGES NOT PERMITTED

NOTES:

FOR NOTES, DRAWING INDEX, REFERENCE DRAWINGS AND PART/MATERIAL LISTS, SEE 24590-HLW-MX-30-00012001.

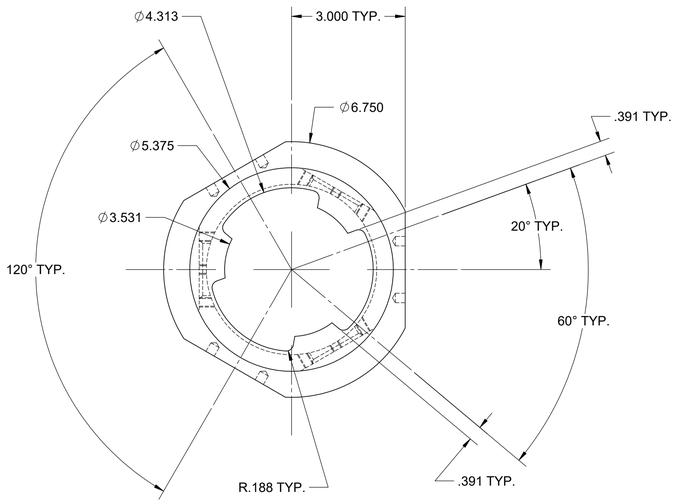

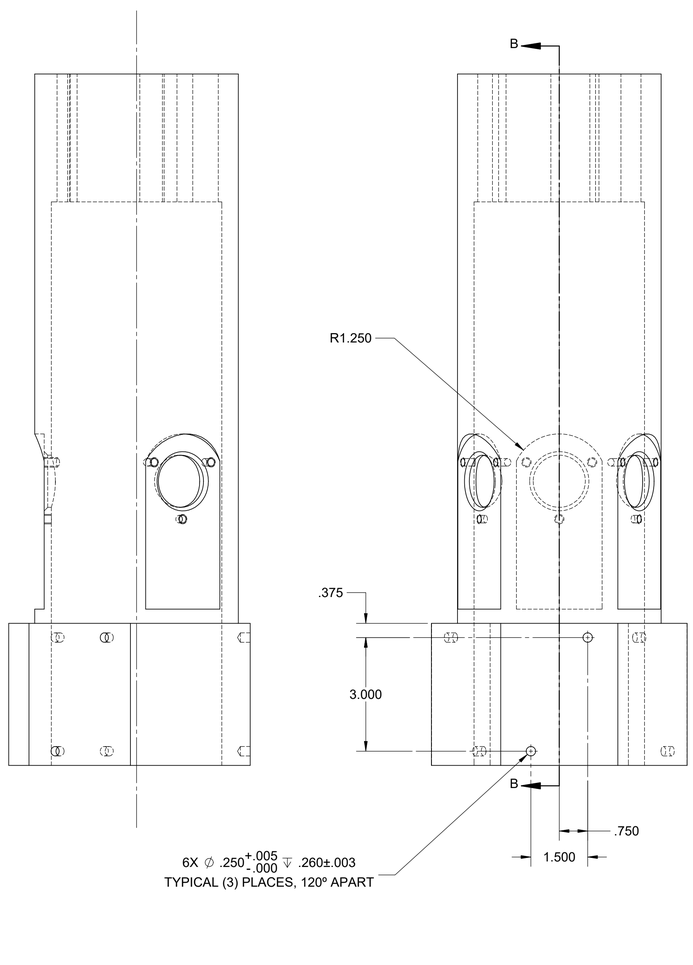

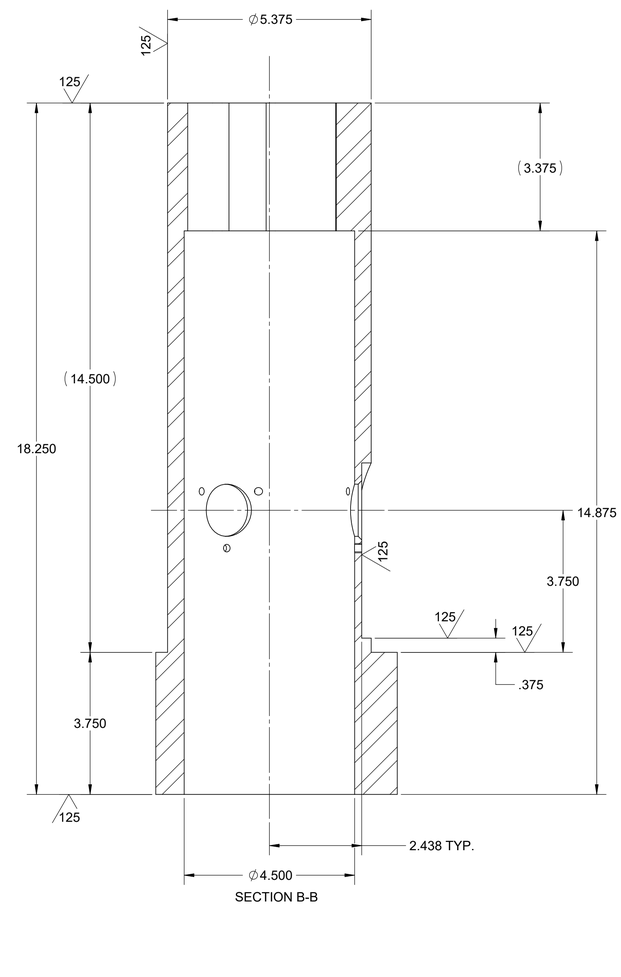

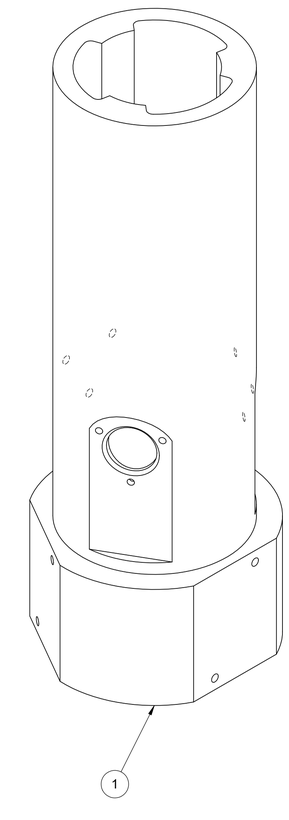

Reviewed No Comments — By: Jason Schaeffer - jschaef2 — Org Name: HLW - Mechanical Handling — Placed: Aug 23, 2024

Checked — By: Kenneth D. Draper - kddraper — Org Name: HLW Mechanical Handling — Placed: Aug 22, 2024

Approved — By: Jason Schaeffer - jschaef2 — Org Name: HLW - Mechanical Handling — Placed: Sep 06, 2024

Originator — By: Lanny Lancaster - llancast — Org Name: HLW Mechanical Handling — Placed: Aug 22, 2024

Q — QUALITY DESIGNATOR

REV	DESCRIPTION	ORG	CHKD	RVWD	APVD	DATE
0	ISSUED FOR PROCUREMENT	LPL	KDD	IMK	JES	9/04/2024

REVISION HISTORY

DO NOT SCALE DRAWING

THIRD ANGLE PROJECTION

UNLESS OTHERWISE SPECIFIED DIMENSIONS ARE IN INCHES

TOLERANCES UNLESS SPECIFIED

X.X	± .1
X.XX	± .03
X.XXX	± .005
FRACTIONS	± 1/16"
ANGLES	± .5°

WEIGHT 146.4 LBS

SUPPLIER DWG NO.

ISSUED BY RPP-WTP PDC

ISSUE STAMP

PROJECT No.	24590	
SITE	HANFORD	
AREA	200E	
BUILDING No.	30 (HLW)	
	BY	DATE
ORIGINATOR	L. LANCASTER	8/22/2024
CHECKER	K. DRAPER	8/22/2024
REVIEWER	I. KINCAID	8/23/2024
APPROVER	J. SCHAEFFER	9/04/2024

CONTENT APPLICABLE TO ALARA? [X] YES [ ] NO

ADR NO. 24590-HLW-ADR-M-24-0011 REV: 0

BECHTEL

RIVER PROTECTION PROJECT
WASTE TREATMENT PLANT
450 HILLS STREET
RICHLAND, WA 99354

CONTRACT No: DE-AC27-01RV14136 WTP SUBCONTRACT No:

HLW VITRIFICATION SYSTEM FABRICATION DRAWING GRAPPLE BASE ASSEMBLY CENTER BASE TUBE DETAIL

SCALE: 1:2

24590-HLW-MX-30-00012002

REV 0

LAST SAVED BY: llancast
FILE NAME: 24590-HLW-MX-30-00012
DATE: 8/15/2024 12:30:28 PM

FORMAT WTP ANSI INCH SIZE D (22x34)

'D' SIZE - 22in*34in
COMPUTER GENERATED - MANUAL
DESIGN CHANGES NOT PERMITTED

NOTES:

FOR NOTES, DRAWING INDEX, REFERENCE DRAWINGS AND PART/MATERIAL LISTS, SEE 24590-HLW-MX-30-00012001.

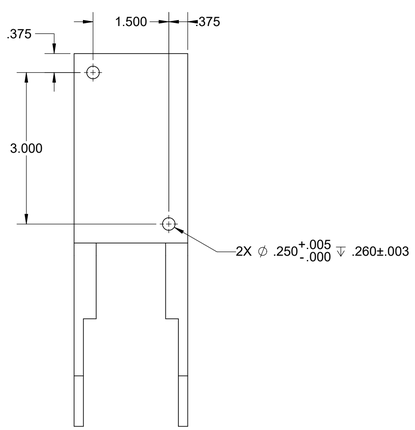

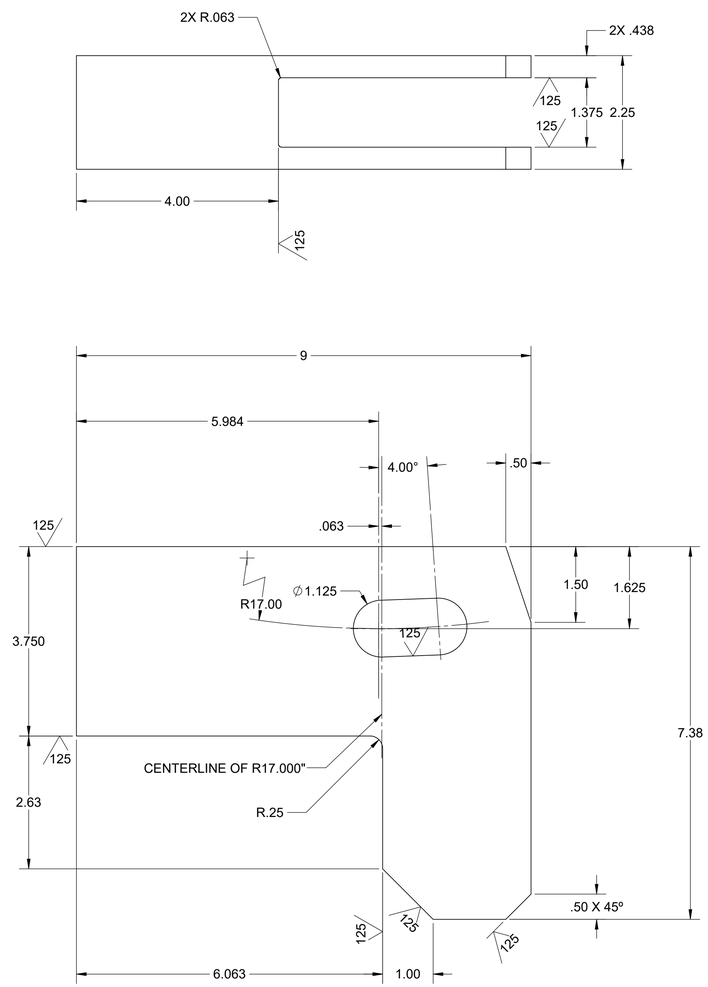

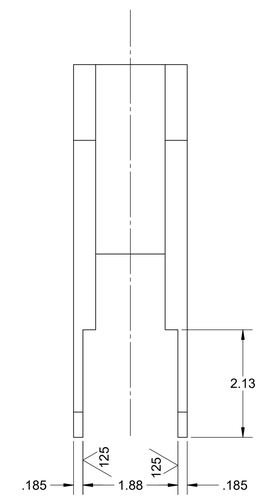

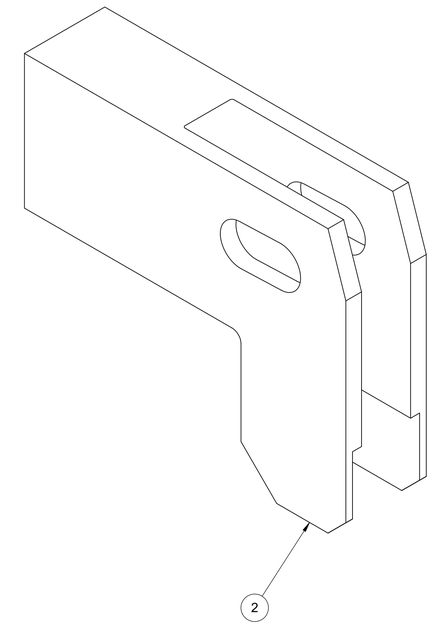

Reviewed No Comments
By: Ian Kincaid - ikincaid
Org Name: HLW - Mechanical Handling
Placed: Aug 23, 2024

Checked
By: Kenneth D. Draper - kddraper
Org Name: HLW Mechanical Handling
Placed: Aug 22, 2024

Originator
By: Lanny Lancaster - llancaster
Org Name: HLW Mechanical Handling
Placed: Aug 22, 2024

Approved
By: Jason Schaeffer - jschaeff2
Org Name: HLW - Mechanical Handling
Placed: Sep 06, 2024

Q
QUALITY DESIGNATOR

REV	DESCRIPTION	ORG	CHKD	RVWD	APVD	DATE
0	ISSUED FOR PROCUREMENT	LPL	KDD	IMK	JES	9/04/2024

REVISION HISTORY

DO NOT SCALE DRAWING

THIRD ANGLE PROJECTION

UNLESS OTHERWISE SPECIFIED DIMENSIONS ARE IN INCHES

TOLERANCES UNLESS SPECIFIED

X.X	± .1
X.XX	± .03
X.XXX	± .005
FRACTIONS	± 1/16"
ANGLES	± .5°

WEIGHT 146.4 LBS

SUPPLIER DWG NO.

ISSUED BY RPP-WTP PDC

ISSUE STAMP

PROJECT No.	24590
SITE	HANFORD
AREA	200E
BUILDING No.	30 (HLW)

	BY	DATE
ORIGINATOR	L. LANCASTER	8/22/2024
CHECKER	K. DRAPER	8/22/2024
REVIEWER	I. KINCAID	8/23/2024
APPROVER	J. SCHAEFFER	9/04/2024

CONTENT APPLICABLE TO ALARA? [X] YES [ ] NO

ADR NO. 24590-HLW-ADR-M-24-0011 REV: 0

BECHTEL

RIVER PROTECTION PROJECT
WASTE TREATMENT PLANT
450 HILLS STREET
RICHLAND, WA 99354

CONTRACT No: DE-AC27-01RV14136 WTP SUBCONTRACT No:

HLW VITRIFICATION SYSTEM FABRICATION DRAWING GRAPPLE BASE ASSEMBLY BASE GUIDE FOOT DETAIL

SCALE: 1:1.5

24590-HLW-MX-30-00012003

REV 0

LAST SAVED BY: llancast
FILE NAME: 24590-HLW-MX-30-00012
DATE: 8/15/2024 12:30:28 PM

FORMAT WTP ANSI INCH SIZE D (22x34)

'D' SIZE - 22in*34in
COMPUTER GENERATED - MANUAL
DESIGN CHANGES NOT PERMITTED

NOTES:

FOR NOTES, DRAWING INDEX, REFERENCE DRAWINGS AND PART/MATERIAL LISTS, SEE 24590-HLW-MX-30-00012001.

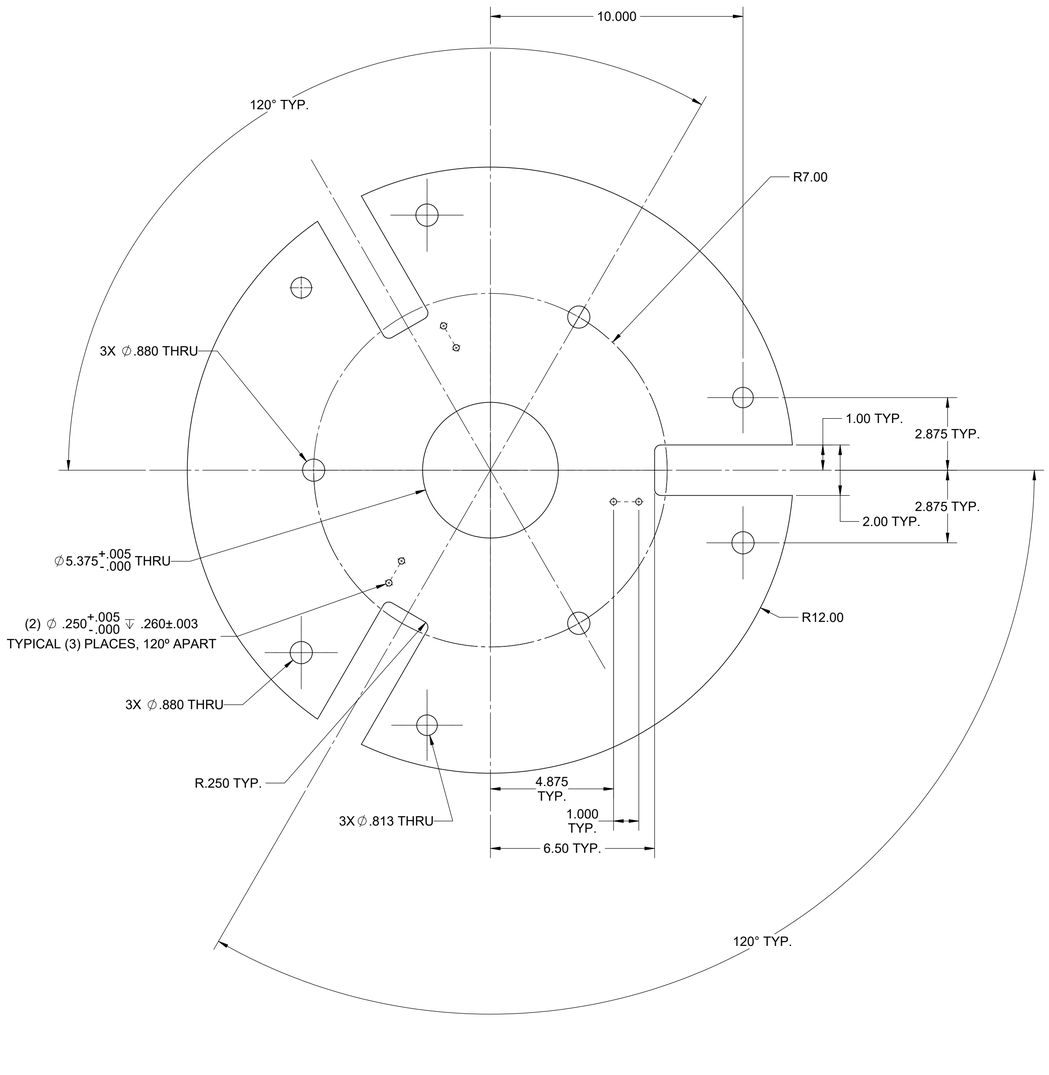

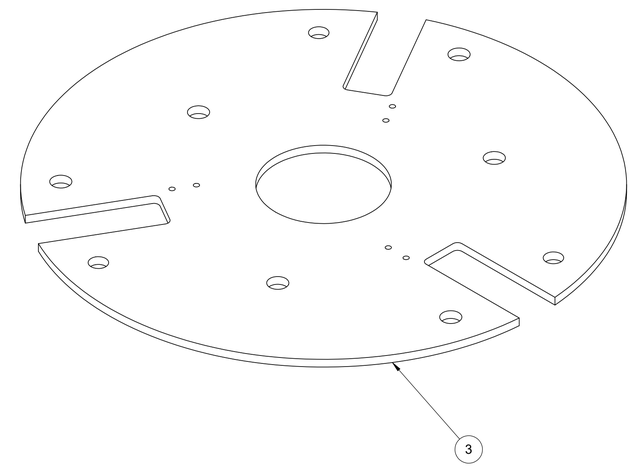

Reviewed No Comments
By: Jason Schaeffer
Org Name: HLW - Mechanical Handling
Placed: Aug 23, 2024

Checked
By: Kenneth D. Draper - kdraper
Org Name: HLW Mechanical Handling
Placed: Aug 22, 2024

Approved
By: Jason Schaeffer - jschaef2
Org Name: HLW - Mechanical Handling
Placed: Sep 06, 2024

Originator
By: Lanny Lancaster - llancast
Org Name: HLW Mechanical Handling
Placed: Aug 22, 2024

Q
QUALITY DESIGNATOR

REV	DESCRIPTION	ORG	CHKD	RVWD	APVD	DATE
0	ISSUED FOR PROCUREMENT	LPL	KDD	IMK	JES	9/04/2024

REVISION HISTORY

DO NOT SCALE DRAWING

THIRD ANGLE PROJECTION

UNLESS OTHERWISE SPECIFIED DIMENSIONS ARE IN INCHES

TOLERANCES UNLESS SPECIFIED

X.X	± .1
X.XX	± .03
X.XXX	± .005
FRACTIONS	± 1/16"
ANGLES	± .5°

WEIGHT 146.4 LBS

SUPPLIER DWG NO.

ISSUED BY RPP-WTP PDC

ISSUE STAMP

PROJECT No.	24590
SITE	HANFORD
AREA	200E
BUILDING No.	30 (HLW)

	BY	DATE
ORIGINATOR	L. LANCASTER	8/22/2024
CHECKER	K. DRAPER	8/22/2024
REVIEWER	I. KINCAID	8/23/2024
APPROVER	J. SCHAEFFER	9/042024

CONTENT APPLICABLE TO ALARA? [X] YES [ ] NO

ADR NO. 24590-HLW-ADR-M-24-0011 REV: 0

RIVER PROTECTION PROJECT
WASTE TREATMENT PLANT
450 HILLS STREET
RICHLAND, WA 99354

CONTRACT No: DE-AC27-01RV14136 WTP SUBCONTRACT No:

HLW VITRIFICATION SYSTEM FABRICATION DRAWING GRAPPLE BASE ASSEMBLY BASE PLATE DETAIL

SCALE: 1:3

24590-HLW-MX-30-00012004

REV 0

LAST SAVED BY: llancast
FILE NAME: 24590-HLW-MX-30-00012
DATE: 8/15/2024 12:30:28 PM

FORMAT WTP ANSI INCH SIZE D (22x34)

'D' SIZE - 22in*34in
COMPUTER GENERATED - MANUAL DESIGN CHANGES NOT PERMITTED

BILL OF MATERIALS

ITEM	QTY	DESCRIPTION	RAW MATERIAL	DOCUMENT NUMBER	MATERIAL	WEIGHT (LBS)
1	1	UPPER SLIDING TUBE DETAIL	CORED BAR 8.000 OD X 4.250 ID X 21.250	24590-HLW-MX-30-00013002	AISI 316L	71.0
2	3	UPPER SLIDING TUBE LINKAGE ATTACHMENT LUG	PLT 1.000 X 2.375 X 6.000	24590-HLW-MX-30-00013003	AISI 316L	2.9
3	6	SPRING PIN, 1/4" X 1/2" LG			18-8 STAINLESS STEEL	0.00

NOTES:

1. ALL DIMENSIONS, TOLERANCES, LIMITS OF SIZE, FORM, LOCATION AND RELATED TERMINOLOGY AND SYMBOLS SHALL BE INTERPRETED IN ACCORDANCE WITH ASME Y14.5-2018
2. BREAK ALL SHARP EDGES AND REMOVE ALL BURRS.
3. UNLESS OTHERWISE SPECIFIED, MACHINED SURFACE FINISH SHALL BE 125 MICROINCHES.
4. WELD IN ACCORDANCE WITH AWS D1.6.

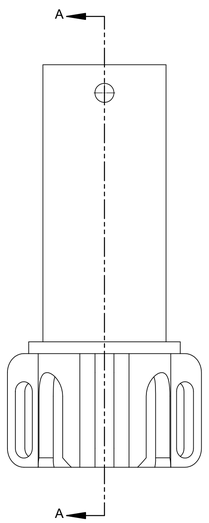

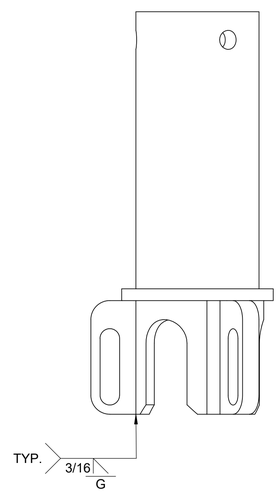

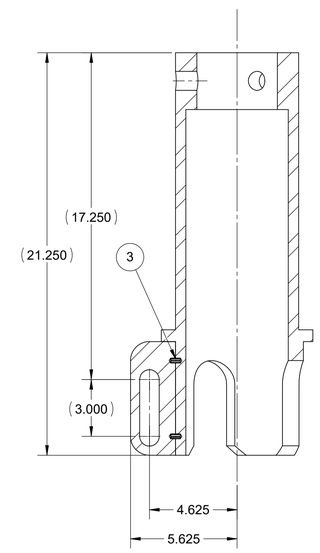

SECTION A-A

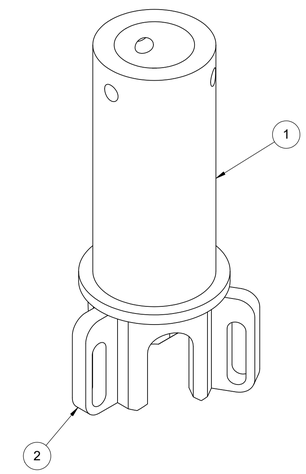

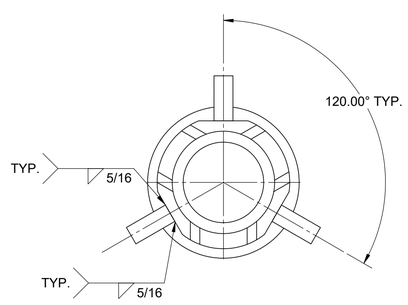

REFERENCE DRAWINGS	
DWG NO.	TITLE
24590-HLW-MX-30-00011001	HLW VIT SYS FAB DWG GRAPPLE ASSEMBLY

DRAWING INDEX	
DWG NO.	TITLE
24590-HLW-MX-30-00013001	HLW VIT SYS FAB DWG UPPER SLIDING TUBE
24590-HLW-MX-30-00013002	HLW VIT SYS FAB DWG UPPER SLIDING TUBE DETAIL
24590-HLW-MX-30-00013003	HLW VIT SYS FAB DWG UPPER SLIDING TUBE LINKAGE ATTACHMENT LUG

Q
QUALITY DESIGNATOR

REV	DESCRIPTION	ORG	CHKD	RVWD	APVD	DATE
0	ISSUED FOR PROCUREMENT	LPL	KDD	IMK	JES	9/04/2024

REVISION HISTORY

Originator By: Lacey Lancaster - llancast Org Name: HLW Mechanical Handling Placed: Aug 22, 2024

Checked By: Kenneth D. Draper - kddraper Org Name: HLW Mechanical Handling Placed: Aug 22, 2024

Reviewed No Comments By: Ian Kincaid - iankincaid Org Name: HLW - Mechanical Handling Placed: Aug 23, 2024

Approved By: Jason Schaeffer - jschaef2 Org Name: HLW - Mechanical Handling Placed: Sep 06, 2024

DO NOT SCALE DRAWING

THIRD ANGLE PROJECTION

UNLESS OTHERWISE SPECIFIED DIMENSIONS ARE IN INCHES

TOLERANCES UNLESS SPECIFIED

X.X	± .1
X.XX	± .03
X.XXX	± .005
FRACTIONS	± 1/16"
ANGLES	± .5°

WEIGHT 79.6 LBS

SUPPLIER DWG NO.

Issued By RPP-WTP PDC

ISSUE STAMP

PROJECT No.	24590
SITE	HANFORD
AREA	200E
BUILDING No.	30 (HLW)

	BY	DATE
ORIGINATOR	L. LANCASTER	8/22/2024
CHECKER	K. DRAPER	8/22/2024
REVIEWER	I. KINCAID	8/23/2024
APPROVER	J. SCHAEFFER	9/04/2024

CONTENT APPLICABLE TO ALARA? [X] YES [ ] NO

ADR NO. 24590-HLW-ADR-M-24-0011 REV: 0

BECHTEL

RIVER PROTECTION PROJECT
WASTE TREATMENT PLANT
450 HILLS STREET
RICHLAND, WA 99354

CONTRACT No: DE-AC27-01RV14136 WTP SUBCONTRACT No:

HLW VITRIFICATION SYSTEM FABRICATION DRAWING UPPER SLIDING TUBE

SCALE: 1:4

24590-HLW-MX-30-00013001

REV 0

LAST SAVED BY: llancast
FILE NAME: 24590-HLW-MX-30-00013
DATE: 8/15/2024 12:32:15 PM

FORMAT WTP ANSI INCH SIZE D (22x34)

'D' SIZE - 22in*34in
COMPUTER GENERATED - MANUAL DESIGN CHANGES NOT PERMITTED

BILL OF MATERIALS

ITEM	QTY	DESCRIPTION	RAW MATERIAL	DOCUMENT NUMBER	MATERIAL	WEIGHT (LBS)
1	1	MOUNT PLATE	PLT .500 X 23.250 X 23.250	24590-HLW-MX-30-00014002	AISI 316L	52.8
2	1	CENTER TUBE	RD BAR Ø9.000 X 5.000	24590-HLW-MX-30-00014003	AISI 316L	36.5
3	3	UPPER LIFTING ARM ATTACHMENT PLATES	PLT 2.250 X 7.130 X 4.000	24590-HLW-MX-30-00014004	AISI 316L	12.9
4	6	UPPER POSITION INDICATOR BUSING BUNG	RD BAR Ø1.500 X 1.500	24590-HLW-MX-30-00014005	AISI 316L	0.3
5	6	SPRING PIN, 1/4" X 1/2" LG			18-8 STAINLESS STEEL	0.00
6	6	BUSHING, .75 ID X 1 OD X 1.5 LG		-	SAE 841 BRONZE	0.2

NOTES

1. ALL DIMENSIONS, TOLERANCES, LIMITS OF SIZE, FORM, LOCATION AND RELATED TERMINOLOGY AND SYMBOLS SHALL BE INTERPRETED IN ACCORDANCE WITH ASME Y14.5-2018
2. BREAK ALL SHARP EDGES AND REMOVE ALL BURRS.
3. UNLESS OTHERWISE SPECIFIED, MACHINED SURFACE FINISH SHALL BE 125 MICROINCHES.
4. WELD IN ACCORDANCE WITH AWS D1.6.

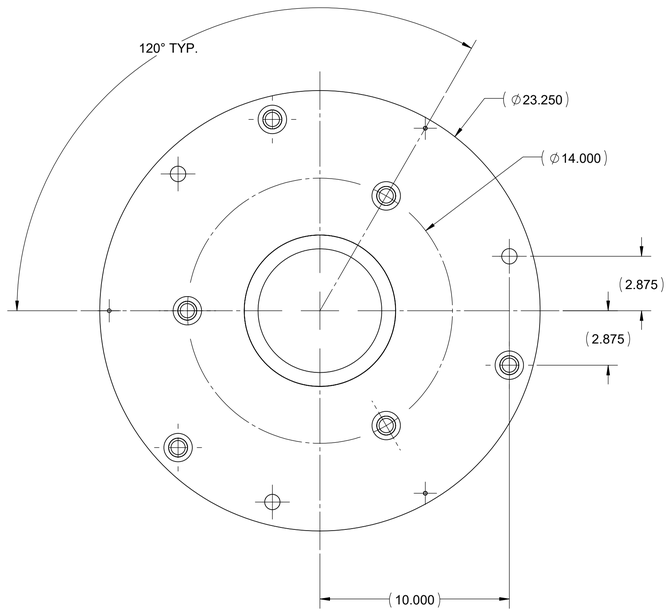

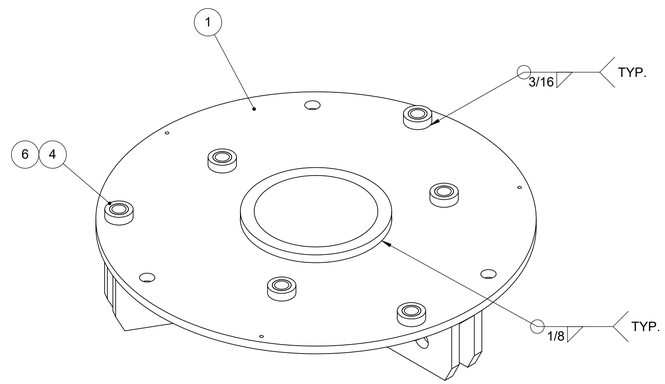

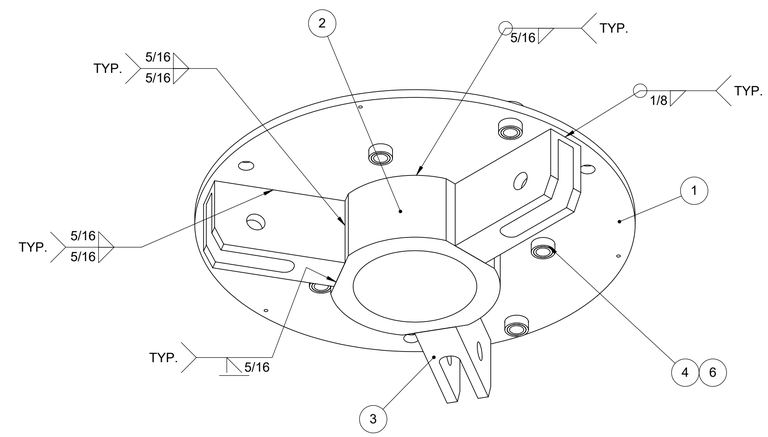

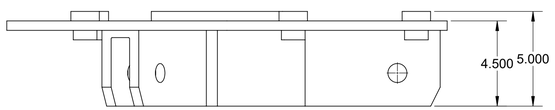

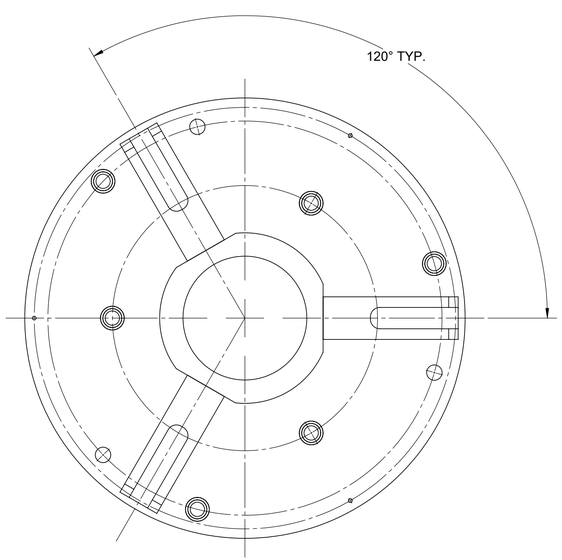

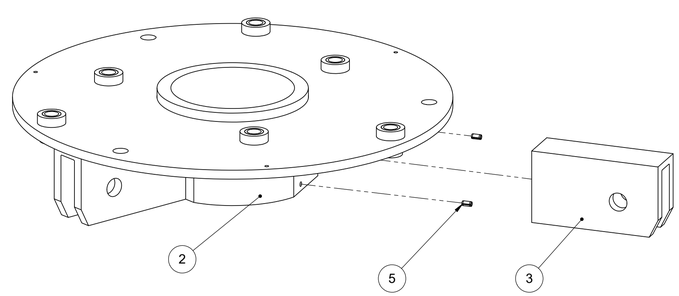

REFERENCE DRAWINGS	
DWG NO.	TITLE
24590-HLW-MX-30-00011001	HLW VIT SYS FAB DWG GRAPPLE ASSEMBLY

DRAWING INDEX	
DWG NO.	TITLE
24590-HLW-MX-30-00014001	HLW VIT SYS FAB DWG UPPER LIFTING FRAME
24590-HLW-MX-30-00014002	HLW VIT SYS FAB DWG UPPER LIFTING FRAME MOUNT PLATE
24590-HLW-MX-30-00014003	HLW VIT SYS FAB DWG UPPER LIFTING FRAME CENTER TUBE
24590-HLW-MX-30-00014004	HLW VIT SYS FAB DWG UPPER LIFTING FRAME UPPER LIFTING ARM ATTACHMENT PLATES
24590-HLW-MX-30-00014005	HLW VIT SYS FAB DWG UPPER LIFTING FRAME UPPER POSITION INDICATOR BUSING BUNG

Q
QUALITY DESIGNATOR

REV	DESCRIPTION	ORG	CHKD	RVWD	APVD	DATE
0	ISSUED FOR PROCUREMENT	LPL	KDD	IMK	JES	9/04/2024

REVISION HISTORY

Originator By: Lacey Lancaster - llancast Org Name: HLW Mechanical Handling Placed: Aug 22, 2024

Checked By: Kenneth D. Draper - kddraper Org Name: HLW Mechanical Handling Placed: Aug 22, 2024

Reviewed No Comments By: Ian Kincaid - iikincaid Org Name: HLW - Mechanical Handling Placed: Aug 23, 2024

Approved By: Jason Schaeffer - jschaeff2 Org Name: HLW - Mechanical Handling Placed: Sep 06, 2024

DO NOT SCALE DRAWING

THIRD ANGLE PROJECTION

UNLESS OTHERWISE SPECIFIED DIMENSIONS ARE IN INCHES

TOLERANCES UNLESS SPECIFIED

X.X	± .1
X.XX	± .03
X.XXX	± .005
FRACTIONS	± 1/16"
ANGLES	± .5°

WEIGHT 130.4 LBS

SUPPLIER DWG NO.

Issued By RPP-WTP PDC

ISSUE STAMP

PROJECT No.	24590	
SITE	HANFORD	
AREA	200E	
BUILDING No.	30 (HLW)	
	BY	DATE
ORIGINATOR	L. LANCASTER	8/22/2024
CHECKER	K. DRAPER	8/22/2024
REVIEWER	I. KINCAID	8/23/2024
APPROVER	J. SCHAEFFER	9/04/2024

CONTENT APPLICABLE TO ALARA? [X] YES [ ] NO

ADR NO. 24590-HLW-ADR-M-24-0011 REV: 0

BECHTEL

RIVER PROTECTION PROJECT
WASTE TREATMENT PLANT
450 HILLS STREET
RICHLAND, WA 99354

CONTRACT No: DE-AC27-01RV14136 WTP SUBCONTRACT No:

HLW VITRIFICATION SYSTEM FABRICATION DRAWING UPPER LIFTING FRAME

SCALE: 1:4

24590-HLW-MX-30-00014001

REV 0

LAST SAVED BY: llancast
FILE NAME: 24590-HLW-MX-30-00014
DATE: 8/15/2024 12:34:17 PM

FORMAT WTP ANSI INCH SIZE D (22x34)

'D' SIZE - 22in*34in
COMPUTER GENERATED - MANUAL DESIGN CHANGES NOT PERMITTED

NOTES:

FOR NOTES, DRAWING INDEX, REFERENCE DRAWINGS AND PART/MATERIAL LISTS, SEE 24590-HLW-MX-30-00014001.

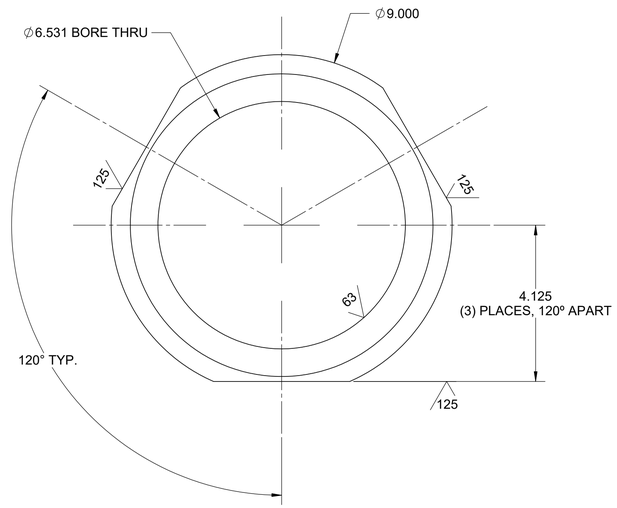

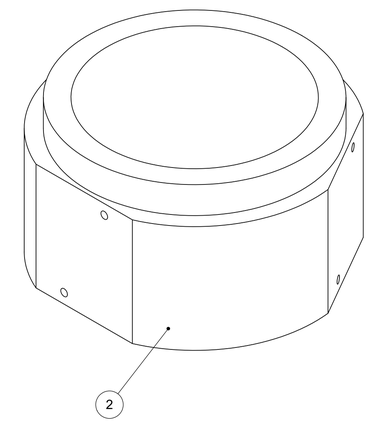

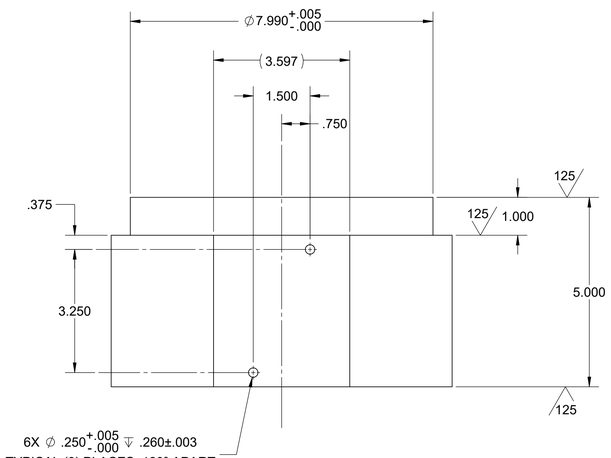

REV	DESCRIPTION	ORG	CHKD	RVWD	APVD	DATE
0	ISSUED FOR PROCUREMENT	LPL	KDD	IMK	JES	9/04/2024

Q QUALITY DESIGNATOR

REVISION HISTORY

Originator By: Lanny Lancaster - llancast Org Name: HLW Mechanical Handling Placed: Aug 22, 2024

Checked By: Kenneth D. Draper - kddraper Org Name: HLW Mechanical Handling Placed: Aug 22, 2024

Reviewed No Comments By: Ian Kincaid - ikincaid Org Name: HLW - Mechanical Handling Placed: Aug 23, 2024

Approved By: Jason Schaeffer - jschaeff Org Name: HLW - Mechanical Handling Placed: Sep 06, 2024

DO NOT SCALE DRAWING

THIRD ANGLE PROJECTION

UNLESS OTHERWISE SPECIFIED DIMENSIONS ARE IN INCHES

TOLERANCES UNLESS SPECIFIED

X.X	± .1
X.XX	± .03
X.XXX	± .005
FRACTIONS	± 1/16"
ANGLES	± .5°

WEIGHT 130.4 LBS

SUPPLIER DWG NO.

Issued By RPP-WTP PDC

ISSUE STAMP

PROJECT No.	24590
SITE	HANFORD
AREA	200E
BUILDING No.	30 (HLW)

	BY	DATE
ORIGINATOR	L. LANCASTER	8/22/2024
CHECKER	K. DRAPER	8/22/2024
REVIEWER	I. KINCAID	8/23/2024
APPROVER	J. SCHAEFFER	9/04/2024

CONTENT APPLICABLE TO ALARA? [X] YES [ ] NO

ADR NO. 24590-HLW-ADR-M-24-0011 REV: 0

BECHTEL

RIVER PROTECTION PROJECT
WASTE TREATMENT PLANT
450 HILLS STREET
RICHLAND, WA 99354

CONTRACT No: DE-AC27-01RV14136 WTP SUBCONTRACT No:

HLW VITRIFICATION SYSTEM FABRICATION DRAWING UPPER LIFTING FRAME CENTER TUBE

SCALE: 1:2

24590-HLW-MX-30-00014003

REV 0

LAST SAVED BY: llancast
FILE NAME: 24590-HLW-MX-30-00014
DATE: 8/15/2024 12:34:17 PM

FORMAT WTP ANSI INCH SIZE D (22x34)

'D' SIZE - 22in*34in
COMPUTER GENERATED - MANUAL
DESIGN CHANGES NOT PERMITTED

NOTES:

FOR NOTES, DRAWING INDEX, REFERENCE DRAWINGS AND PART/MATERIAL LISTS, SEE 24590-HLW-MX-30-00014001.

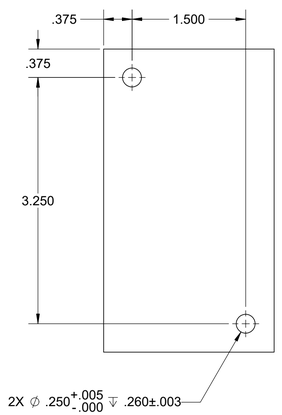

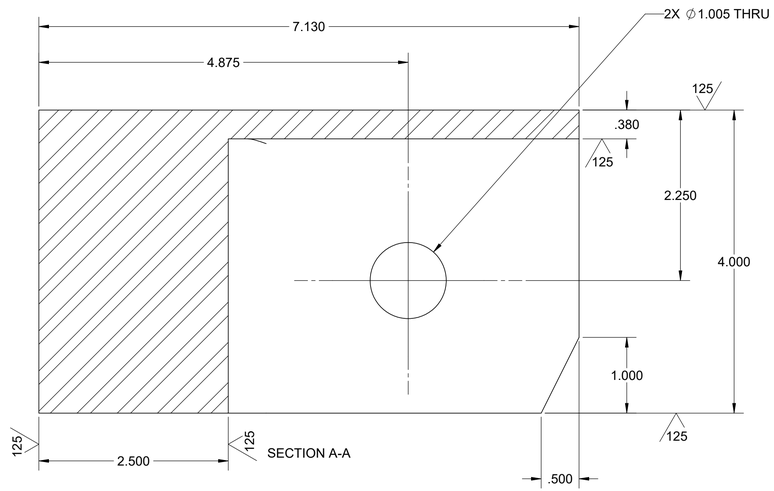

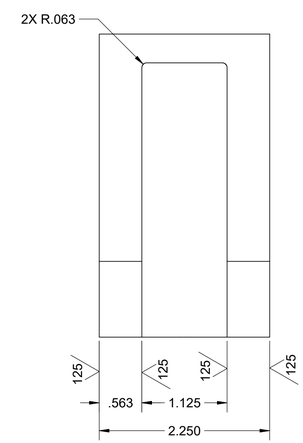

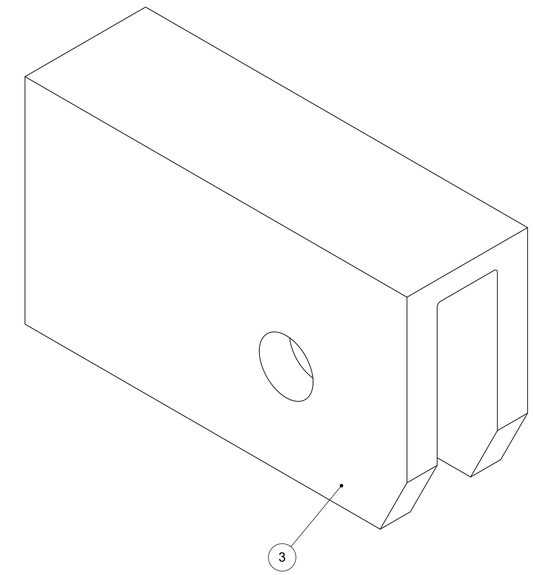

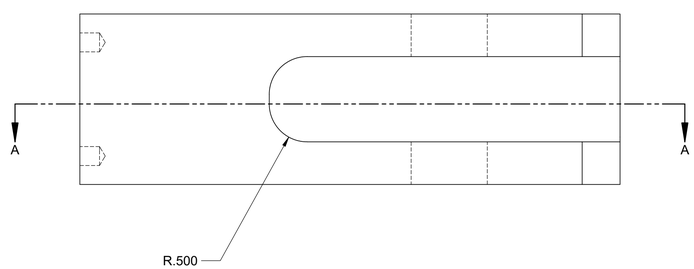

REV	DESCRIPTION	ORG	CHKD	RVWD	APVD	DATE
0	ISSUED FOR PROCUREMENT	LPL	KDD	IMK	JES	9/04/2024

REVISION HISTORY

QUALITY DESIGNATOR: Q

Originator By: Lacino Lancaster - llancast Org Name: HLW Mechanical Handling Signed: Aug 22, 2024

Checked By: Kenneth D. Draper - kddraper Org Name: HLW Mechanical Handling Signed: Aug 22, 2024

Reviewed No Comments By: Ian Kincaid - ikincaid Org Name: HLW - Mechanical Handling Signed: Aug 23, 2024

Approved By: Jostin Schaeffer - jschaef2 Org Name: HLW - Mechanical Handling Signed: Sep 06, 2024

DO NOT SCALE DRAWING

THIRD ANGLE PROJECTION

UNLESS OTHERWISE SPECIFIED DIMENSIONS ARE IN INCHES

TOLERANCES UNLESS SPECIFIED

X.X	± .1
X.XX	± .03
X.XXX	± .005
FRACTIONS	± 1/16"
ANGLES	± .5°

WEIGHT 130.4 LBS

SUPPLIER DWG NO.

Issued By RPP-WTP PDC

ISSUE STAMP

PROJECT No.	24590	
SITE	HANFORD	
AREA	200E	
BUILDING No.	30 (HLW)	

	BY	DATE
ORIGINATOR	L. LANCASTER	8/22/2024
CHECKER	K. DRAPER	8/22/2024
REVIEWER	I. KINCAID	8/23/2024
APPROVER	J. SCHAEFFER	9/04/2024

CONTENT APPLICABLE TO ALARA? [X] YES [ ] NO

ADR NO. 24590-HLW-ADR-M-24-0011 REV: 0

BECHTEL

RIVER PROTECTION PROJECT
WASTE TREATMENT PLANT
450 HILLS STREET
RICHLAND, WA 99354

CONTRACT No: DE-AC27-01RV14136 WTP SUBCONTRACT No:

HLW VITRIFICATION SYSTEM FABRICATION DRAWING UPPER LIFTING FRAME UPPER LIFTING ARM ATTACHMENT PLATES

SCALE: 1:1

24590-HLW-MX-30-00014004

REV 0

LAST SAVED BY: llancast
FILE NAME: 24590-HLW-MX-30-00014
DATE: 8/15/2024 12:34:17 PM

FORMAT WTP ANSI INCH SIZE D (22x34)

'D' SIZE - 22in*34in
COMPUTER GENERATED - MANUAL DESIGN CHANGES NOT PERMITTED

BILL OF MATERIALS

ITEM	QTY	DESCRIPTION	RAW MATERIAL	DOCUMENT NUMBER	MATERIAL	WEIGHT (LBS)
1	1	LIFTING ARM PLATE	PLT 1.250 X 24.250 X 4.750	24590-HLW-MX-30-00015002	NITRONIC 50 (XM-19) (UNS S20910)	22.6
2	1	LIFTING ARM TOOTH	PLT .250 X 1.750 X .500	24590-HLW-MX-30-00015003	AISI 316L	0.1

NOTES:

1. ALL DIMENSIONS, TOLERANCES, LIMITS OF SIZE, FORM, LOCATION AND RELATED TERMINOLOGY AND SYMBOLS SHALL BE INTERPRETED IN ACCORDANCE WITH ASME Y14.5-2018
2. BREAK ALL SHARP EDGES AND REMOVE ALL BURRS.
3. UNLESS OTHERWISE SPECIFIED, MACHINED SURFACE FINISH SHALL BE 125 MICROINCHES.
4. WELD IN ACCORDANCE WITH AWS D1.6.
5. THE CONTENTS OF THIS DRAWING IS WASTE ACCEPTANCE IMPACTING (WAI). REFER TO 24590-HLW-RPT-PR-01-001 AND 24590-HLW-WIQP-MH-09-0006.

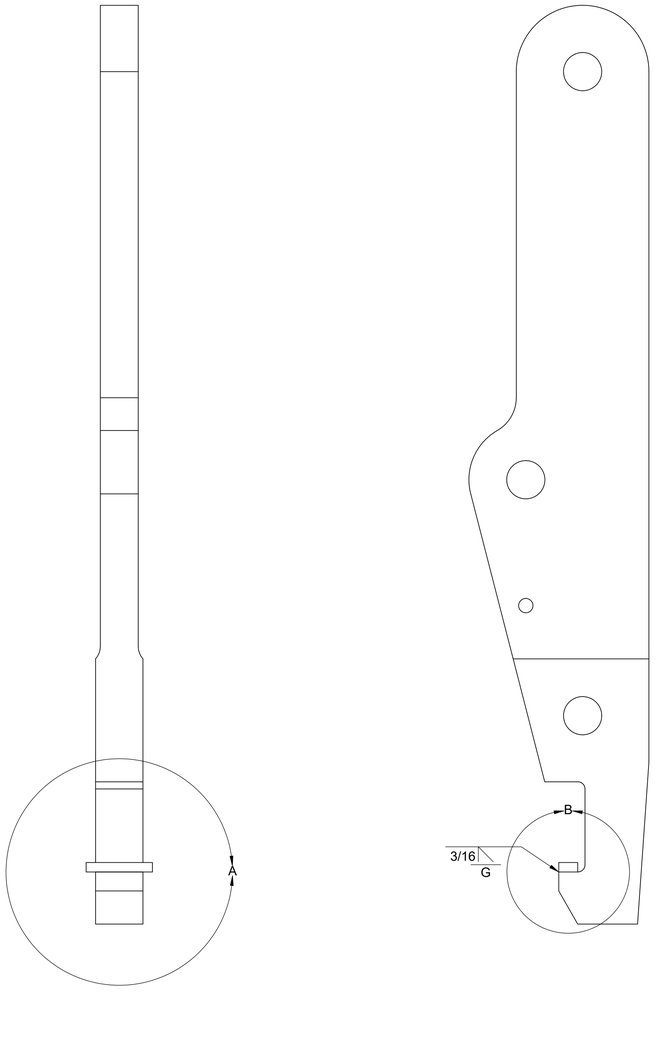

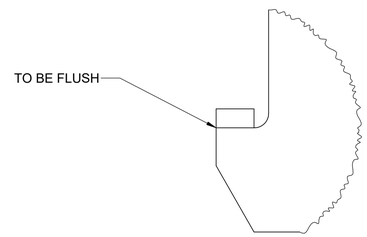

DETAIL B
SCALE 1 : 1

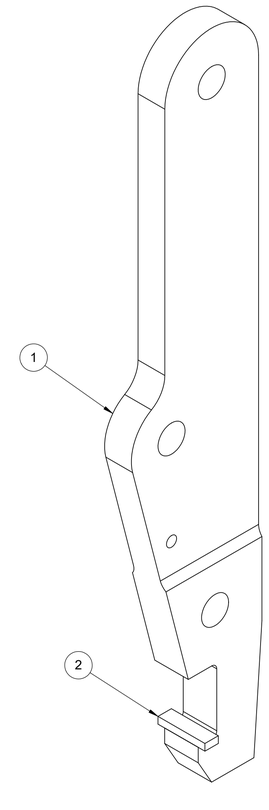

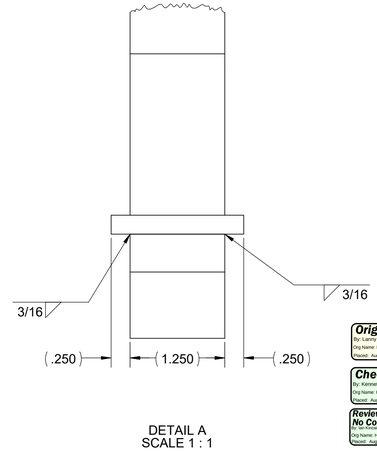

DETAIL A
SCALE 1 : 1

REFERENCE DRAWINGS	
DWG NO.	TITLE
24590-HLW-MX-30-00011001	HLW VIT SYS FAB DWG GRAPPLE ASSEMBLY

DRAWING INDEX	
DWG NO.	TITLE
24590-HLW-MX-30-00015001	HLW VIT SYS FAB DWG LIFTING ARM ASSY
24590-HLW-MX-30-00015002	HLW VIT SYS FAB DWG LIFTING ARM ASSY LIFTING ARM PLATE DETAIL
24590-HLW-MX-30-00015003	HLW VIT SYS FAB DWG LIFTING ARM ASSY LIFTING ARM TOOTH DETAIL

Q
QUALITY DESIGNATOR

REV	DESCRIPTION	ORG	CHKD	RVWD	APVD	DATE
0	ISSUED FOR PROCUREMENT	LPL	KDD	IMK	JES	9/04/2024

REVISION HISTORY

Originator By: Lanny Lancaster - llancast Org Name: HLW Mechanical Handling Placed: Aug 22, 2024

Checked By: Kenneth D. Draper - kddraper Org Name: HLW Mechanical Handling Placed: Aug 22, 2024

Reviewed No Comments By: Ian Kincaid - ikincaid Org Name: HLW - Mechanical Handling Placed: Aug 23, 2024

Approved By: Jason Schaeffer - jschaef2 Org Name: HLW - Mechanical Handling Placed: Sep 09, 2024

DO NOT SCALE DRAWING

THIRD ANGLE PROJECTION

UNLESS OTHERWISE SPECIFIED DIMENSIONS ARE IN INCHES

TOLERANCES UNLESS SPECIFIED

X.X	± .1
X.XX	± .03
X.XXX	± .005
FRACTIONS	± 1/16"
ANGLES	± .5°

WEIGHT 22.6 LBS

SUPPLIER DWG NO.

Issued By
RPP-WTP PDC

ISSUE STAMP

PROJECT No.	24590
SITE	HANFORD
AREA	200E
BUILDING No.	30 (HLW)

	BY	DATE
ORIGINATOR	L. LANCASTER	8/22/2024
CHECKER	K. DRAPER	8/22/2024
REVIEWER	I. KINCAID	8/23/2024
APPROVER	J. SCHAEFFER	9/04/2024

CONTENT APPLICABLE TO ALARA? [X] YES [ ] NO

ADR NO. 24590-HLW-ADR-M-24-0011 REV: 0

BECHTEL

RIVER PROTECTION PROJECT
WASTE TREATMENT PLANT
450 HILLS STREET
RICHLAND, WA 99354

CONTRACT No: DE-AC27-01RV14136 WTP SUBCONTRACT No:

HLW VITRIFICATION SYSTEM FABRICATION DRAWING LIFTING ARM ASSEMBLY

SCALE: 1:2

24590-HLW-MX-30-00015001

REV 0

LAST SAVED BY: llancast
FILE NAME: 24590-HLW-MX-30-00015
DATE: 8/15/2024 12:36:31 PM

FORMAT WTP ANSI INCH SIZE D (22x34)

'D' SIZE - 22in*34in
COMPUTER GENERATED - MANUAL
DESIGN CHANGES NOT PERMITTED

BILL OF MATERIALS

ITEM	QTY	DESCRIPTION	RAW MATERIAL	DOCUMENT NUMBER	MATERIAL	WEIGHT (LBS)
1	1	CANISTER POSITION INDICATOR ROD	RD BAR Ø.375 X 22.375	24590-HLW-MX-30-00016002	AISI 316L	0.7
2	1	CANISTER POSITION INDICATOR TOP	RD BAR Ø.750 X 1.500	24590-HLW-MX-30-00016003	AISI 316L	0.2

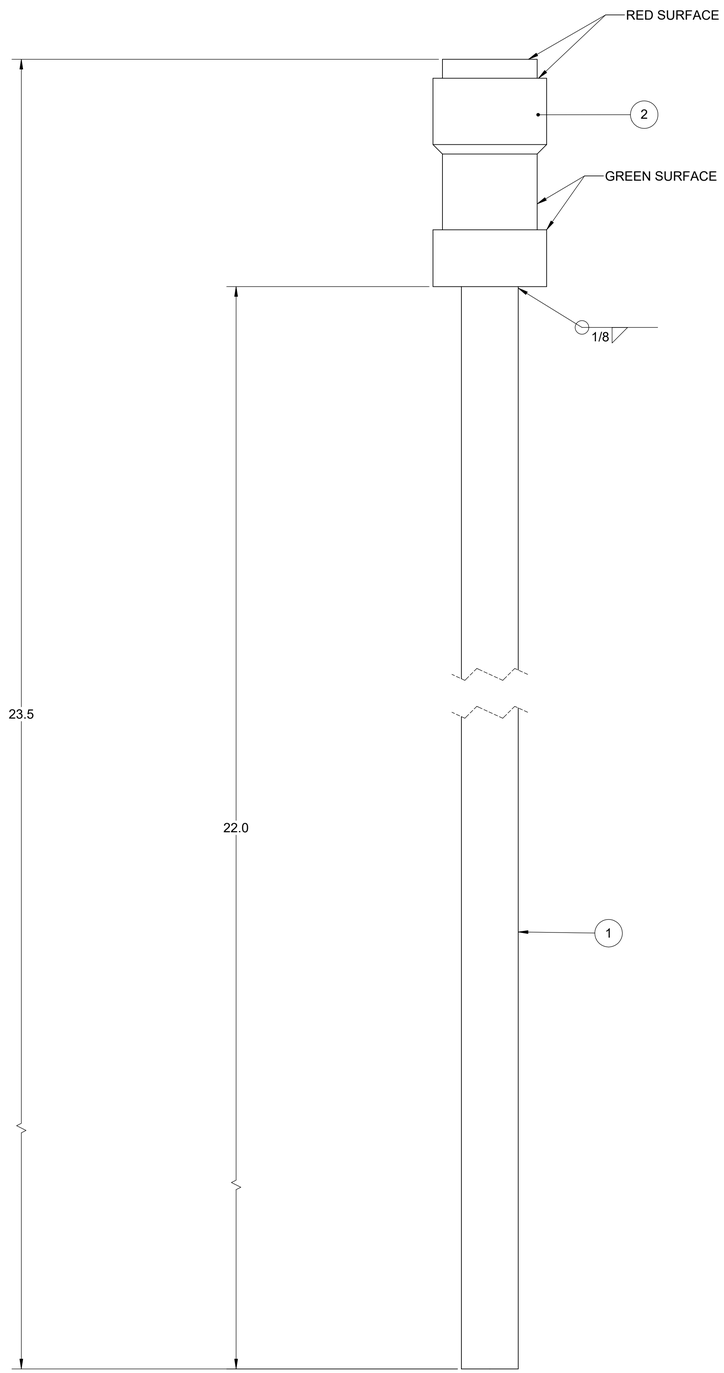

COLOR CODE EXPLANATION:
DISENGAGED:
-WHEN GRAPPLE IS DISENGAGED FROM THE CANISTER THE ROD IS POSITIONED DOWN EXPOSING ONLY RED, INDICATING THERE IS NOT A CANISTER PROPERLY LOCATED UNDER THE GRAPPLE.
ENGAGED:
-WHEN GRAPPLE IS ENGAGED TO A CANISTER THE ROD IS PUSHED UPWARD EXPOSING GREEN, INDICATING THERE IS A CANISTER PROPERLY LOCATED UNDER THE GRAPPLE.
(THE MOVEMENT OF THIS ROD IS OPPOSITE OF THE LIFTING ARM ROD)

NOTES:
1. ALL DIMENSIONS, TOLERANCES, LIMITS OF SIZE, FORM, LOCATION AND RELATED TERMINOLOGY AND SYMBOLS SHALL BE INTERPRETED IN ACCORDANCE WITH ASME Y14.5-2018
2. BREAK ALL SHARP EDGES AND REMOVE ALL BURRS.
3. UNLESS OTHERWISE SPECIFIED, MACHINED SURFACE FINISH SHALL BE 125 MICROINCHES.
4. WELD IN ACCORDANCE WITH AWS D1.6.
5. THE CONTENTS OF THIS DRAWING IS WASTE ACCEPTANCE IMPACTING (WAI). REFER TO 24590-HLW-RPT-PR-01-001 AND 24590-HLW-WIQP-MH-09-0006.

REFERENCE DRAWINGS	
DWG NO.	TITLE
24590-HLW-MX-30-00011001	HLW VIT SYS FAB DWG GRAPPLE ASSEMBLY

DRAWING INDEX	
DWG NO.	TITLE
24590-HLW-MX-30-00016001	HLW VIT SYS FAB DWG CANISTER POSITION INDICATOR
24590-HLW-MX-30-00016002	HLW VIT SYS FAB DWG CANISTER POSITION INDICATOR ROD DETAIL
24590-HLW-MX-30-00016003	HLW VIT SYS FAB DWG CANISTER POSITION INDICATOR TOP DETAIL

Q QUALITY DESIGNATOR

REV	DESCRIPTION	ORG	CHKD	RVWD	APVD	DATE
0	ISSUED FOR PROCUREMENT	LPL	KDD	IMK	JES	9/04/2024

REVISION HISTORY

Originator By: Lance Lancaster - llancast Org Name: HLW Mechanical Handling Placed: Aug 22, 2024
Checked By: Kenneth D. Draper - kddraper Org Name: HLW Mechanical Handling Placed: Aug 22, 2024
Reviewed No Comments By: Ian Kincaid - ikincaid Org Name: HLW - Mechanical Handling Placed: Aug 23, 2024
Approved By: Jason Schaeffer - jschaef2 Org Name: HLW - Mechanical Handling Placed: Sep 06, 2024

DO NOT SCALE DRAWING

THIRD ANGLE PROJECTION

UNLESS OTHERWISE SPECIFIED DIMENSIONS ARE IN INCHES

TOLERANCES UNLESS SPECIFIED

X.X	± .1
X.XX	± .03
X.XXX	± .005
FRACTIONS	± 1/16"
ANGLES	± .5˚

WEIGHT 0.9 LBS

SUPPLIER DWG NO.

ISSUED BY RPP-WTP PDC
ISSUE STAMP

PROJECT No.	24590
SITE	HANFORD
AREA	200E
BUILDING No.	30 (HLW)

	BY	DATE
ORIGINATOR	L. LANCASTER	8/22/2024
CHECKER	K. DRAPER	8/22/2024
REVIEWER	I. KINCAID	8/23/2024
APPROVER	J. SCHAEFFER	9/04/2024

CONTENT APPLICABLE TO ALARA? [X] YES [ ] NO
ADR NO. 24590-HLW-ADR-M-24-0011 REV: 0

BECHTEL

RIVER PROTECTION PROJECT
WASTE TREATMENT PLANT
450 HILLS STREET
RICHLAND, WA 99354

CONTRACT No: DE-AC27-01RV14136 WTP SUBCONTRACT No:

HLW VITRIFICATION SYSTEM FABRICATION DRAWING CANISTER POSITION INDICATOR

SCALE: 2:1

24590-HLW-MX-30-00016001

REV 0

LAST SAVED BY: llancast
FILE NAME: 24590-HLW-MX-30-00016
DATE: 8/21/2024 6:42:41 AM

FORMAT WTP ANSI INCH SIZE D (22x34)

'D' SIZE - 22in*34in
COMPUTER GENERATED - MANUAL
DESIGN CHANGES NOT PERMITTED

NOTES:

FOR NOTES, DRAWING INDEX, REFERENCE DRAWINGS AND PART/MATERIAL LISTS, SEE 24590-HLW-MX-30-00016001.

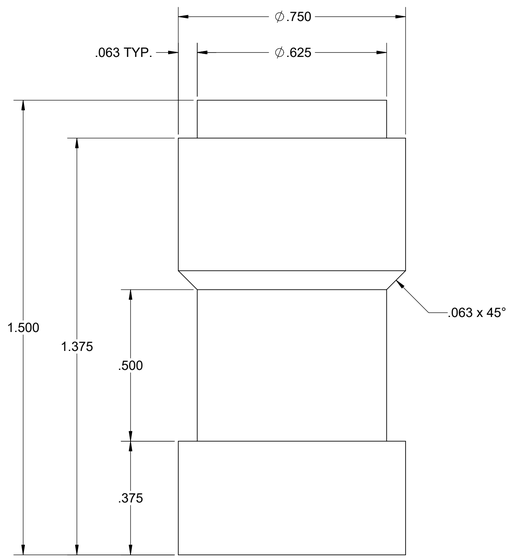

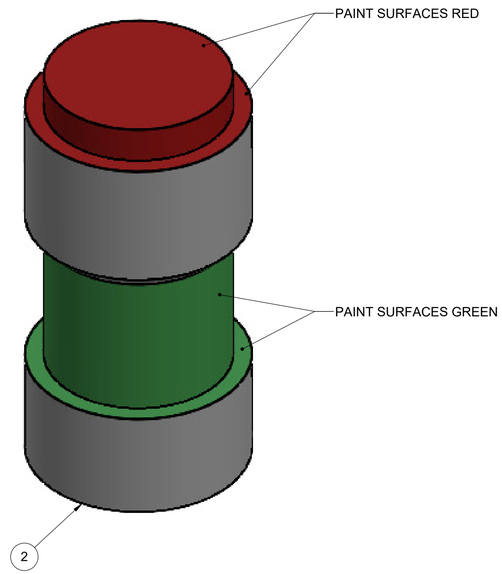

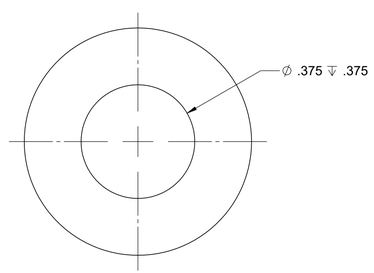

REV	DESCRIPTION	ORG	CHKD	RVWD	APVD	DATE
0	ISSUED FOR PROCUREMENT	LPL	KDD	IMK	JES	9/04/2024

Q QUALITY DESIGNATOR

REVISION HISTORY

Originator By: Lanny Lancaster - llancast Org Name: HLW Mechanical Handling Placed: Aug 22, 2024

Checked By: Kenneth D. Draper - kddraper Org Name: HLW Mechanical Handling Placed: Aug 22, 2024

Reviewed No Comments By: DE-AC27-01RV14136 - WVUSE Org Name: HLW - Mechanical Handling Placed: Aug 23, 2024

Approved By: Jason Schaeffer - jschaef2 Org Name: HLW - Mechanical Handling Placed: Sep 06, 2024

DO NOT SCALE DRAWING

THIRD ANGLE PROJECTION

UNLESS OTHERWISE SPECIFIED DIMENSIONS ARE IN INCHES

TOLERANCES UNLESS SPECIFIED

X.X	± .1
X.XX	± .03
X.XXX	± .005
FRACTIONS	± 1/16"
ANGLES	± .5°

WEIGHT 0.9 LBS

SUPPLIER DWG NO.

ISSUED BY RPP-WTP PDC

ISSUE STAMP

PROJECT No.	24590
SITE	HANFORD
AREA	200E
BUILDING No.	30 (HLW)

	BY	DATE
ORIGINATOR	L. LANCASTER	8/22/2024
CHECKER	K. DRAPER	8/22/2024
REVIEWER	I. KINCAID	8/23/2024
APPROVER	J. SCHAEFFER	9/04/2024

CONTENT APPLICABLE TO ALARA? [X] YES [ ] NO

ADR NO. 24590-HLW-ADR-M-24-0011 REV: 0

BECHTEL

RIVER PROTECTION PROJECT
WASTE TREATMENT PLANT
450 HILLS STREET
RICHLAND, WA 99354

CONTRACT No: DE-AC27-01RV14136 WTP SUBCONTRACT No:

HLW VITRIFICATION SYSTEM FABRICATION DRAWING CANISTER POSITION INDICATOR TOP DETAIL

SCALE: 4:1

24590-HLW-MX-30-00016003

REV 0

LAST SAVED BY: llancast
FILE NAME: 24590-HLW-MX-30-00016
DATE: 8/21/2024 6:42:41 AM

FORMAT WTP ANSI INCH SIZE D (22x34)

'D' SIZE - 22in*34in
COMPUTER GENERATED - MANUAL
DESIGN CHANGES NOT PERMITTED

BILL OF MATERIALS

ITEM	QTY	DESCRIPTION	RAW MATERIAL	DOCUMENT NUMBER	MATERIAL	WEIGHT (LBS)
1	1	CAM FOLLOWER HOUSING	RD BAR 2.500 X 1.313	24590-HLW-MX-30-00018002	AISI 316L	0.6
2	1	CAM FOLLOWER	RD BAR .625 X 1.750	24590-HLW-MX-30-00018003	17-4 PH H1150	0.1
3	1	CAM FOLLOWER WASHER	RD BAR .875 X .105	24590-HLW-MX-30-00018004	AISI 316L	0.0
4	1	BEARING, .375 SHAFT X 1.125 OD X 1" WIDE		-	STAINLESS STEEL	0.2
5	1	RETAINING RING FOR .375 SHAFT		-	STAINLESS STEEL	0.0
6	1	BEARING, INNER RACE, .375" BORE X 1.2490" O.D. X 1.010" WIDE		-	AISI 316	0.1

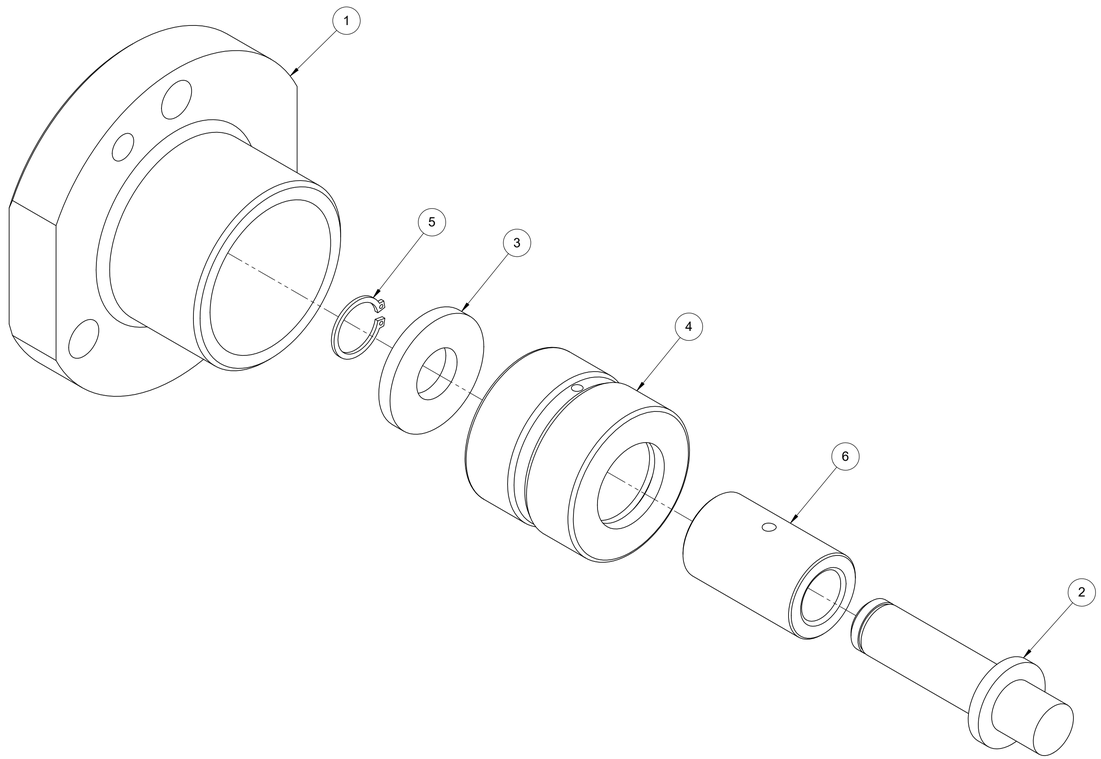

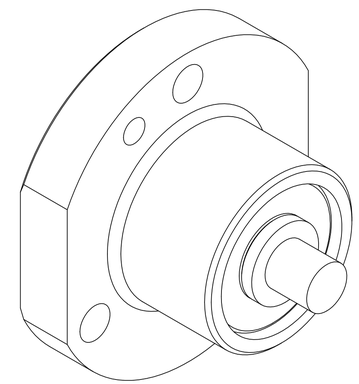

NOTES:

1. ALL DIMENSIONS, TOLERANCES, LIMITS OF SIZE, FORM, LOCATION AND RELATED TERMINOLOGY AND SYMBOLS SHALL BE INTERPRETED IN ACCORDANCE WITH ASME Y14.5-2018
2. BREAK ALL SHARP EDGES AND REMOVE ALL BURRS.
3. UNLESS OTHERWISE SPECIFIED, MACHINED SURFACE FINISH SHALL BE 125 MICROINCHES.

4 DICRONITE DRY LUBRICANT APPLIED TO PART.

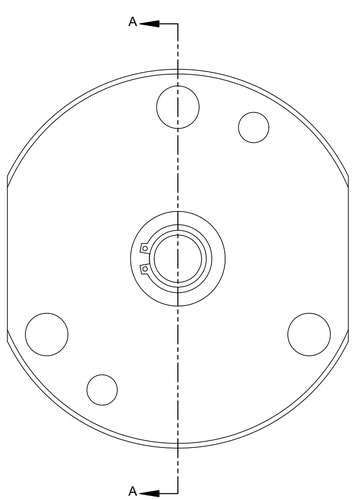

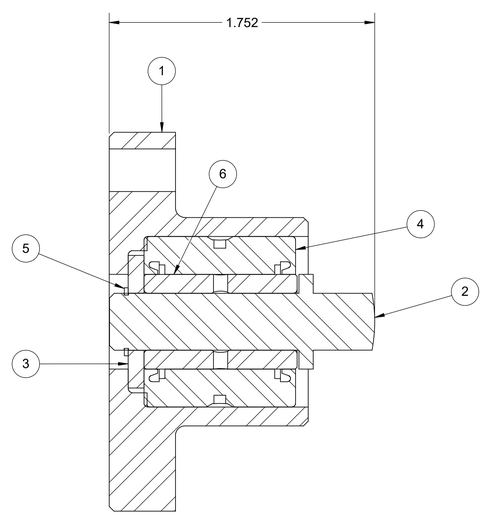

SECTION A-A

REFERENCE DRAWINGS	
DWG NO.	TITLE
24590-HLW-MX-30-00011001	HLW VIT SYS FAB DWG GRAPPLE ASSEMBLY

DRAWING INDEX	
DWG NO.	TITLE
24590-HLW-MX-30-00018001	HLW VIT SYS FAB DWG CAM FOLLOWER ASSY
24590-HLW-MX-30-00018002	HLW VIT SYS FAB DWG CAM FOLLOWER ASSY CAM FOLLOWER HOUSING DETAIL
24590-HLW-MX-30-00018003	HLW VIT SYS FAB DWG CAM FOLLOWER ASSY CAM FOLLOWER DETAIL
24590-HLW-MX-30-00018004	HLW VIT SYS FAB DWG CAM FOLLOWER ASSY CAM FOLLOWER WASHER DETAIL

Q QUALITY DESIGNATOR

REV	DESCRIPTION	ORG	CHKD	RVWD	APVD	DATE
0	ISSUED FOR PROCUREMENT	LPL	KDD	IMK	JES	9/04/2024

REVISION HISTORY

Originator By: Lanny Lancaster - llancast Org Name: HLW Mechanical Handling Placed: Aug 22, 2024

Checked By: Kenneth D. Draper - kddraper Org Name: HLW Mechanical Handling Placed: Aug 22, 2024

Reviewed No Comments By: Ian Kincaid - ikincaid Org Name: HLW - Mechanical Handling Placed: Aug 23, 2024

Approved By: Jason Schaeffer - jschaeff2 Org Name: HLW - Mechanical Handling Placed: Sep 06, 2024

DO NOT SCALE DRAWING

THIRD ANGLE PROJECTION

UNLESS OTHERWISE SPECIFIED DIMENSIONS ARE IN INCHES

TOLERANCES UNLESS SPECIFIED

X.X	± .1
X.XX	± .03
X.XXX	± .005
FRACTIONS	± 1/16"
ANGLES	± .5°

WEIGHT 0.9 LBS

SUPPLIER DWG NO.

ISSUED BY RPP-WTP PDC

ISSUE STAMP

PROJECT No.	24590
SITE	HANFORD
AREA	200E
BUILDING No.	30 (HLW)

	BY	DATE
ORIGINATOR	L. LANCASTER	8/22/2024
CHECKER	K. DRAPER	8/22/2024
REVIEWER	I. KINCAID	8/23/2024
APPROVER	J. SCHAEFFER	9/04/2024

CONTENT APPLICABLE TO ALARA? [X] YES [ ] NO

ADR NO. 24590-HLW-ADR-M-24-0011 REV: 0

BECHTEL

RIVER PROTECTION PROJECT
WASTE TREATMENT PLANT
450 HILLS STREET
RICHLAND, WA 99354

CONTRACT No: DE-AC27-01RV14136 WTP SUBCONTRACT No:

HLW VITRIFICATION SYSTEM FABRICATION DRAWING CAM FOLLOWER ASSEMBLY

SCALE: 2:1

24590-HLW-MX-30-00018001

REV 0

LAST SAVED BY: llancast
FILE NAME: 24590-HLW-MX-30-00018
DATE: 8/21/2024 12:42:29 PM

FORMAT WTP ANSI INCH SIZE D (22x34)

'D' SIZE - 22in*34in
COMPUTER GENERATED - MANUAL
DESIGN CHANGES NOT PERMITTED

NOTES:

FOR NOTES, DRAWING INDEX, REFERENCE DRAWINGS AND PART/MATERIAL LISTS, SEE 24590-HLW-MX-30-00018001.

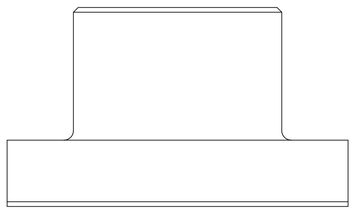

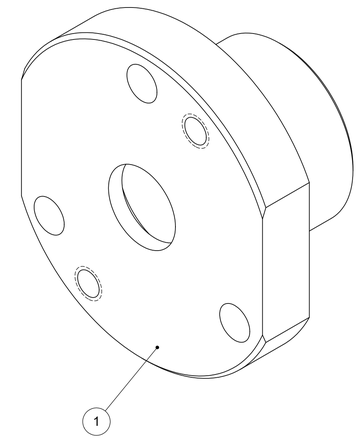

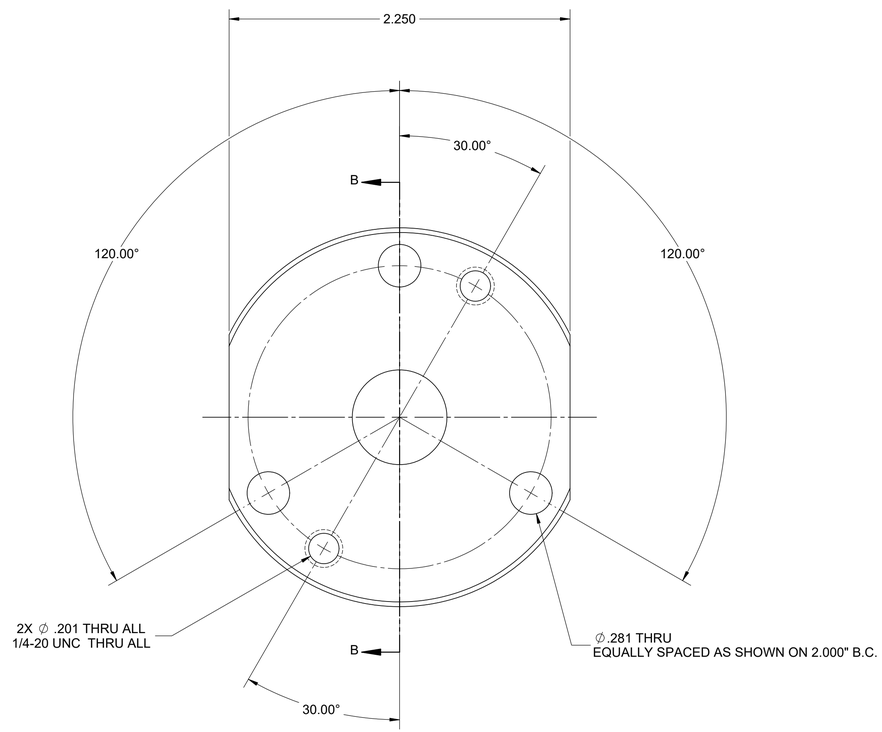

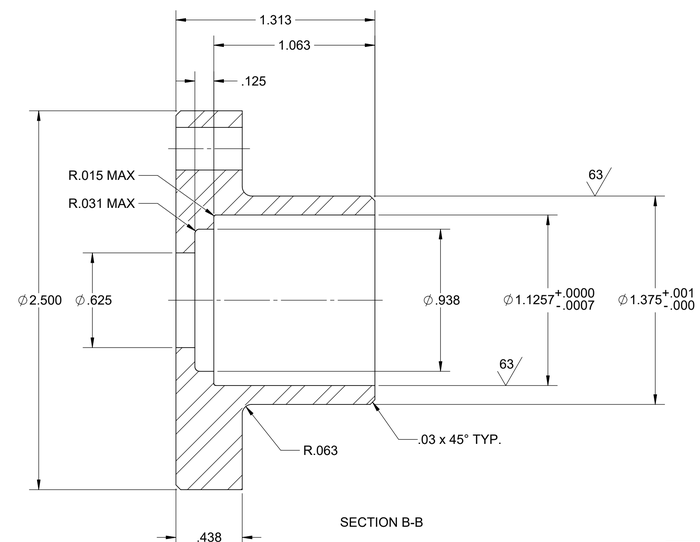

SECTION B-B

REV	DESCRIPTION	ORG	CHKD	RVWD	APVD	DATE
0	ISSUED FOR PROCUREMENT	LPL	KDD	IMK	JES	9/04/2024

REVISION HISTORY

Q QUALITY DESIGNATOR

Originator By: Larry Lancaster - llancast Org Name: HLW Mechanical Handling Dsgnerl Aug 22, 2024

Checked By: Kenneth D. Draper - kddraper Org Name: HLW Mechanical Handling Dsgnerl Aug 22, 2024

Reviewed No Comments By: Ian Kincaid - ikincaid Org Name: HLW - Mechanical Handling Dsgnerl Aug 23, 2024

Approved By: Jason Schaeffer - jschaef2 Org Name: HLW - Mechanical Handling Dsgnerl Sep 06, 2024

DO NOT SCALE DRAWING

THIRD ANGLE PROJECTION

UNLESS OTHERWISE SPECIFIED DIMENSIONS ARE IN INCHES

TOLERANCES UNLESS SPECIFIED

X.X	± .1
X.XX	± .03
X.XXX	± .005
FRACTIONS	± 1/16"
ANGLES	± .5°

WEIGHT 0.9 LBS

SUPPLIER DWG NO.

ISSUED BY RPP-WTP PDC

ISSUE STAMP

PROJECT No.	24590
SITE	HANFORD
AREA	200E
BUILDING No.	30 (HLW)

	BY	DATE
ORIGINATOR	L. LANCASTER	8/22/2024
CHECKER	K. DRAPER	8/22/2024
REVIEWER	I. KINCAID	8/23/2024
APPROVER	J. SCHAEFFER	9/04/2024

CONTENT APPLICABLE TO ALARA? [X] YES [ ] NO

ADR NO. 24590-HLW-ADR-M-24-0011 REV: 0

BECHTEL

RIVER PROTECTION PROJECT
WASTE TREATMENT PLANT
450 HILLS STREET
RICHLAND, WA 99354

CONTRACT No: DE-AC27-01RV14136 WTP SUBCONTRACT No:

HLW VITRIFICATION SYSTEM FABRICATION DRAWING CAM FOLLOWER ASSEMBLY CAM FOLLOWER HOUSING DETAIL

SCALE: 2:1

24590-HLW-MX-30-00018002

REV 0

LAST SAVED BY: llancast
FILE NAME: 24590-HLW-MX-30-00018
DATE: 8/21/2024 12:42:29 PM

FORMAT WTP ANSI INCH SIZE D (22x34)

'D' SIZE - 22in*34in
COMPUTER GENERATED - MANUAL DESIGN CHANGES NOT PERMITTED

BILL OF MATERIALS

ITEM	QTY	DESCRIPTION	RAW MATERIAL	DOCUMENT NUMBER	MATERIAL	WEIGHT (LBS)
1	1	CAM SHAFT	RD BAR 4.375 X 27.250	24590-HLW-MX-30-00019002	AISI 316L	58.0
2	3	CAM KEY	SQ BAR .625 X 3.500	24590-HLW-MX-30-00019004	AISI 316L	0.3
3	6	FLAT HEAD MACHINE SCREW (PH) UNC SS 304 PLAIN		-	AISI 304	0.0

NOTES:

1. ALL DIMENSIONS, TOLERANCES, LIMITS OF SIZE, FORM, LOCATION AND RELATED TERMINOLOGY AND SYMBOLS SHALL BE INTERPRETED IN ACCORDANCE WITH ASME Y14.5-2018
2. BREAK ALL SHARP EDGES AND REMOVE ALL BURRS.
3. UNLESS OTHERWISE SPECIFIED, MACHINED SURFACE FINISH SHALL BE 125 MICROINCHES.
4. THE CONTENTS OF THIS DRAWING IS WASTE ACCEPTANCE IMPACTING (WAI). REFER TO 24590-HLW-RPT-PR-01-001 AND 24590-HLW-WIQP-MH-09-0006.

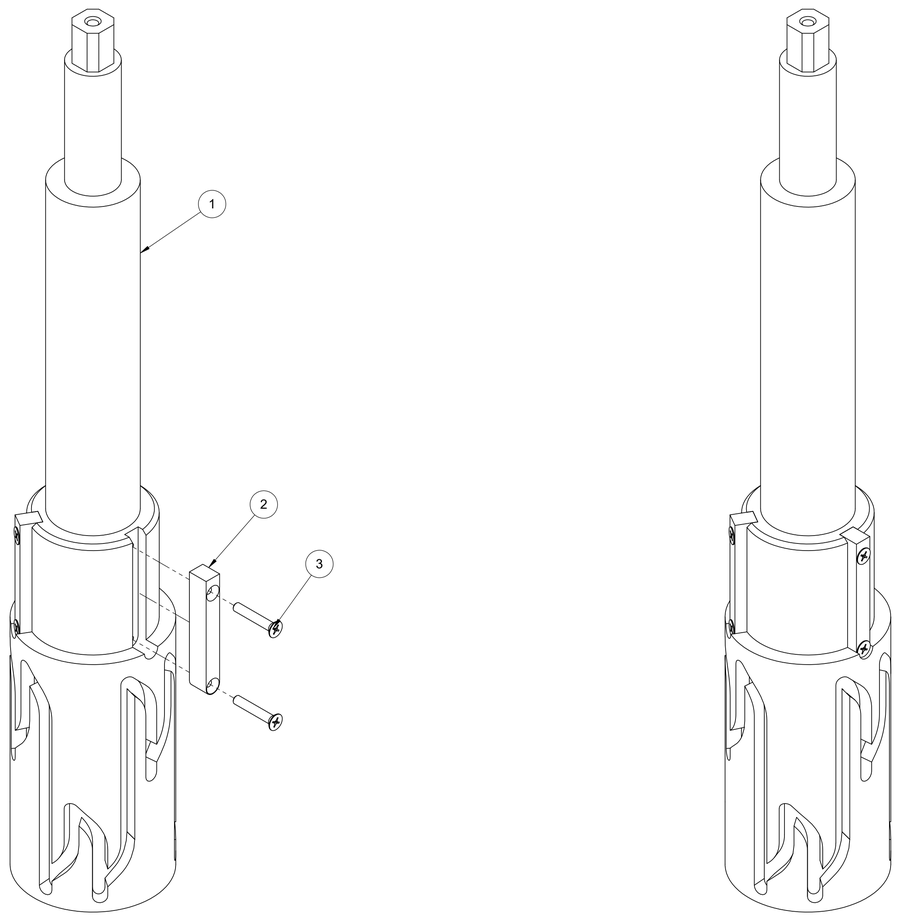

REFERENCE DRAWINGS	
DWG NO.	TITLE
24590-HLW-MX-30-00011001	HLW VIT SYS FAB DWG GRAPPLE ASSEMBLY

DRAWING INDEX	
DWG NO.	TITLE
24590-HLW-MX-30-00019001	HLW VIT SYS FAB DWG VERTICAL CAM SHAFT ASSY
24590-HLW-MX-30-00019002	HLW VIT SYS FAB DWG VERTICAL CAM SHAFT ASSY CAM SHAFT
24590-HLW-MX-30-00019003	HLW VIT SYS FAB DWG VERTICAL CAM SHAFT ASSY CAM LAYOUT - FLAT DEVELOPMENT
24590-HLW-MX-30-00019004	HLW VIT SYS FAB DWG VERTICAL CAM SHAFT ASSY CAM KEY

Q
QUALITY DESIGNATOR

REV	DESCRIPTION	ORG	CHKD	RVWD	APVD	DATE
0	ISSUED FOR PROCUREMENT	LPL	KDD	IMK	JES	9/04/2024

REVISION HISTORY

Originator By: Lance Lancaster - llancast Org Name: HLW Mechanical Handling Signed: Aug 22, 2024

Checked By: Kenneth D. Draper - kddraper Org Name: HLW Mechanical Handling Signed: Aug 22, 2024

Reviewed No Comments By: Ian Kincaid - ikincaid Org Name: HLW - Mechanical Handling Signed: Aug 23, 2024

Approved By: Jason Schaeffer - jschaef2 Org Name: HLW - Mechanical Handling Signed: Sep 06, 2024

DO NOT SCALE DRAWING

THIRD ANGLE PROJECTION

UNLESS OTHERWISE SPECIFIED DIMENSIONS ARE IN INCHES

TOLERANCES UNLESS SPECIFIED

X.X	± .1
X.XX	± .03
X.XXX	± .005
FRACTIONS	± 1/16"
ANGLES	± .5°

WEIGHT 59.1 LBS

SUPPLIER DWG NO.

ISSUED BY RPP-WTP PDC

ISSUE STAMP

PROJECT No.	24590
SITE	HANFORD
AREA	200E
BUILDING No.	30 (HLW)

	BY	DATE
ORIGINATOR	L. LANCASTER	8/22/2024
CHECKER	K. DRAPER	8/22/2024
REVIEWER	I. KINCAID	8/23/2024
APPROVER	J. SCHAEFFER	9/04/2024

CONTENT APPLICABLE TO ALARA? [X] YES [ ] NO

ADR NO. 24590-HLW-ADR-M-24-0011 REV: 0

BECHTEL

RIVER PROTECTION PROJECT
WASTE TREATMENT PLANT
450 HILLS STREET
RICHLAND, WA 99354

CONTRACT No: DE-AC27-01RV14136 WTP SUBCONTRACT No:

HLW VITRIFICATION SYSTEM FABRICATION DRAWING VERTICAL CAM SHAFT ASSEMBLY

SCALE: 1:2

24590-HLW-MX-30-00019001

REV 0

LAST SAVED BY: llancast
FILE NAME: 24590-HLW-MX-30-00019
DATE: 8/15/2024 1:04:25 PM

FORMAT WTP ANSI INCH SIZE D (22x34)

'D' SIZE - 22in*34in
COMPUTER GENERATED - MANUAL DESIGN CHANGES NOT PERMITTED

NOTES:

FOR NOTES, DRAWING INDEX, REFERENCE DRAWINGS AND PART/MATERIAL LISTS, SEE 24590-HLW-MX-30-00019001.

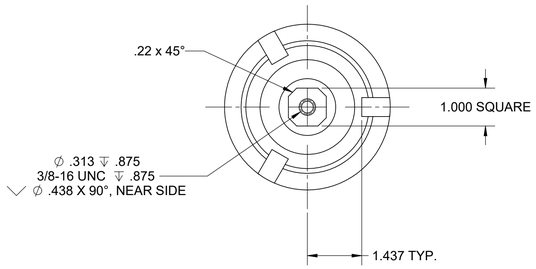

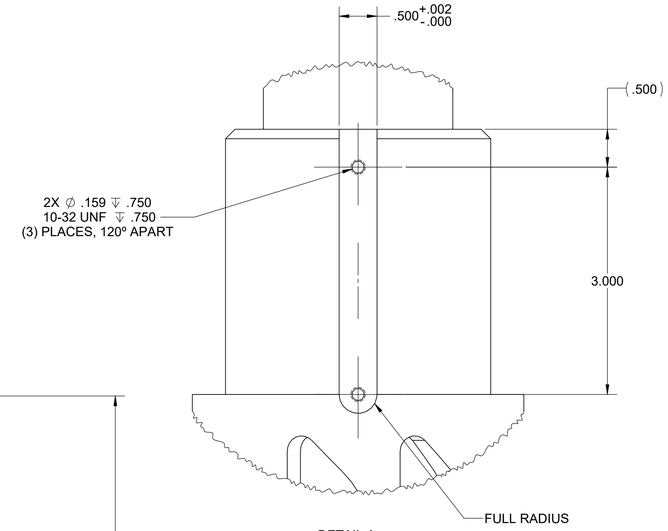

DETAIL A
SCALE 1 : 1

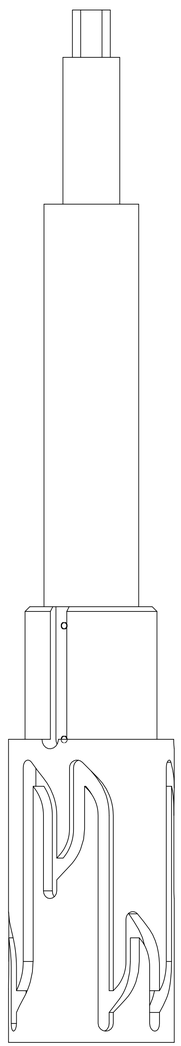

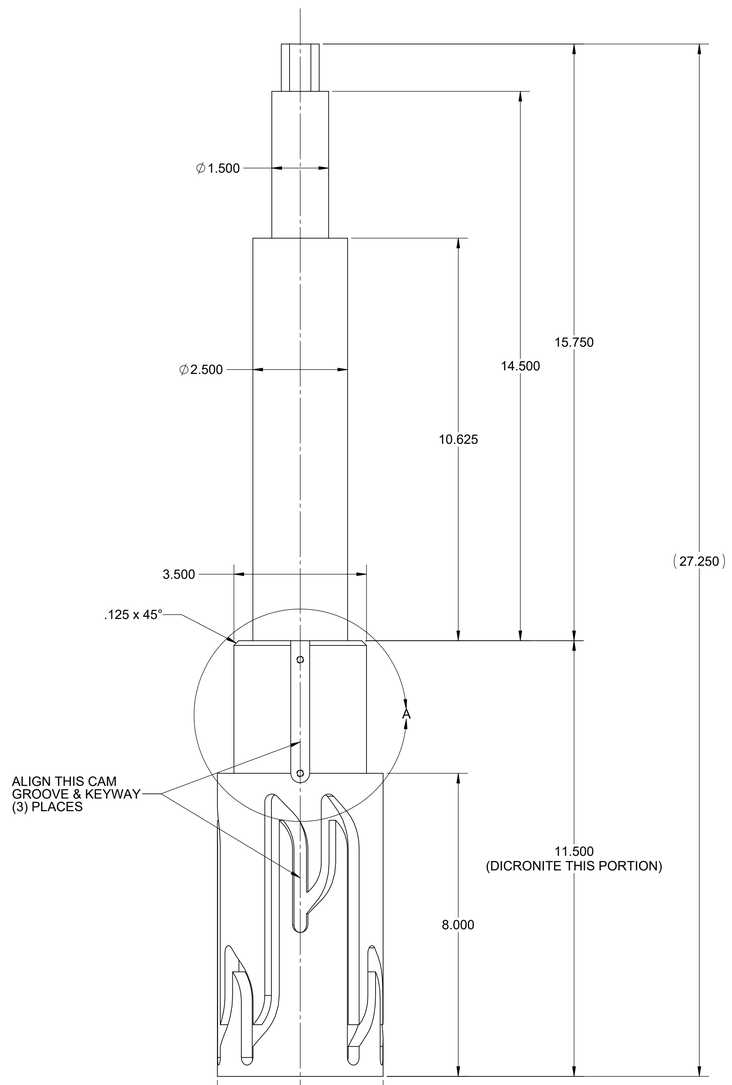

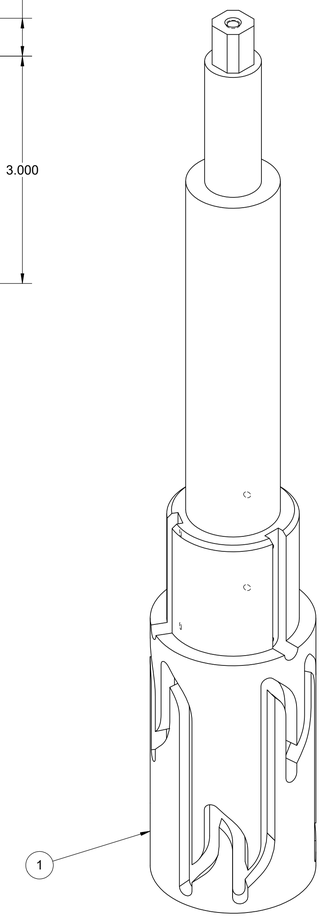

REV	DESCRIPTION	ORG	CHKD	RVWD	APVD	DATE
0	ISSUED FOR PROCUREMENT	LPL	KDD	IMK	JES	9/04/2024

REVISION HISTORY

QUALITY DESIGNATOR: Q

Originator By: Leena Lancaster - llancast Org Name: HLW Mechanical Handling Placed: Aug 22, 2024

Checked By: Kenneth D. Draper - kddraper Org Name: HLW Mechanical Handling Placed: Aug 22, 2024

Reviewed No Comments Org Name: HLW - Mechanical Handling Placed: Aug 23, 2024

Approved By: Jason Schaeffer - jschaef2 Org Name: HLW - Mechanical Handling Placed: Sep 06, 2024

DO NOT SCALE DRAWING

THIRD ANGLE PROJECTION

UNLESS OTHERWISE SPECIFIED DIMENSIONS ARE IN INCHES

TOLERANCES UNLESS SPECIFIED

X.X	± .1
X.XX	± .03
X.XXX	± .005
FRACTIONS	± 1/16"
ANGLES	± .5°

WEIGHT 59.1 LBS

SUPPLIER DWG NO.

ISSUED BY RPP-WTP PDC

ISSUE STAMP

PROJECT No.	24590	
SITE	HANFORD	
AREA	200E	
BUILDING No.	30 (HLW)	
	BY	DATE
ORIGINATOR	L. LANCASTER	8/22/2024
CHECKER	K. DRAPER	8/22/2024
REVIEWER	I. KINCAID	8/23/2024
APPROVER	J. SCHAEFFER	9/04/2024

CONTENT APPLICABLE TO ALARA? [X] YES [ ] NO

ADR NO. 24590-HLW-ADR-M-24-0011 REV: 0

BECHTEL

RIVER PROTECTION PROJECT
WASTE TREATMENT PLANT
450 HILLS STREET
RICHLAND, WA 99354

CONTRACT No: DE-AC27-01RV14136 WTP SUBCONTRACT No:

HLW VITRIFICATION SYSTEM FABRICATION DRAWING VERTICAL CAM SHAFT ASSEMBLY CAM SHAFT

SCALE: 1:2

24590-HLW-MX-30-00019002

REV 0

LAST SAVED BY: llancast
FILE NAME: 24590-HLW-MX-30-00019
DATE: 8/15/2024 1:04:25 PM

FORMAT WTP ANSI INCH SIZE D (22x34)

'D' SIZE - 22in*34in
COMPUTER GENERATED - MANUAL
DESIGN CHANGES NOT PERMITTED

BILL OF MATERIALS

ITEM	QTY	DESCRIPTION	RAW MATERIAL	DOCUMENT NUMBER	MATERIAL	WEIGHT (LBS)
1	1	LIFTING SHACKLE ATTACHMENT LUG	RD BAR Ø12.000 X 7.750	24590-HLW-MX-30-00020002	AISI 316L	116.2
2	1	HOOK ATTACHMENT SHACKLE	PLT 4.000 X 8.000 X 13.000	24590-HLW-MX-30-00020003	17-4 PH H1150	32.4
3	1	SHACKLE PIN	RD BAR Ø1.500 X 12.000	24590-HLW-MX-30-00020004	17-4 PH H1150	6.0
4	2	WASHER: OVERSIZED, 1 1/2" SCREW SIZE, 1.562" ID, 3.25" OD			AISI 316	
5	2	EXTERNAL RETAINING RING SH-150ST			STAINLESS STEEL	0.0

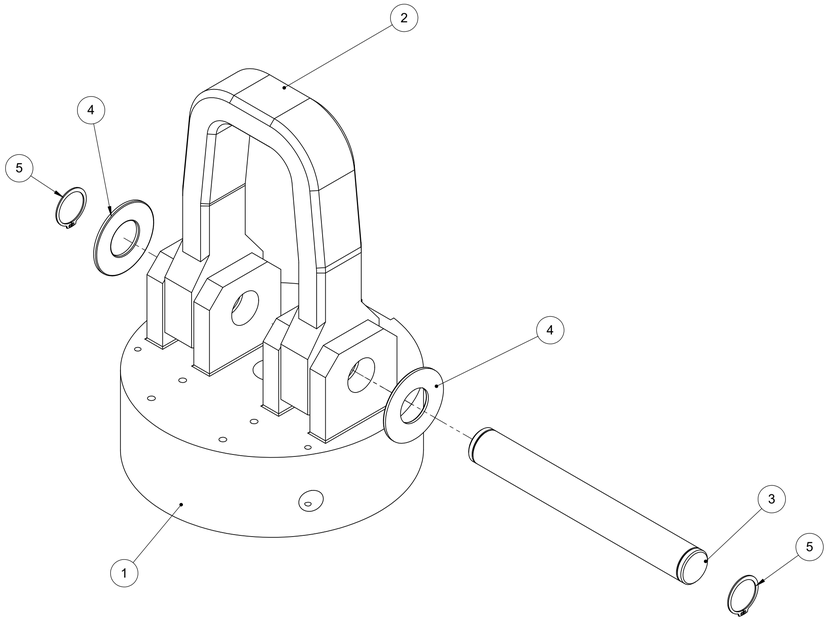

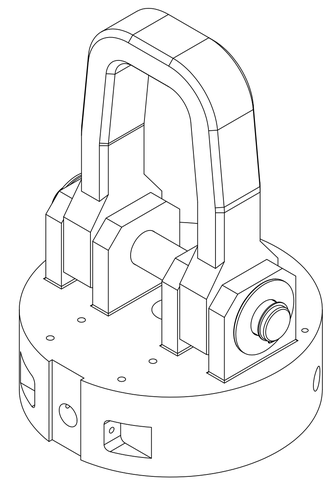

NOTES:

1. ALL DIMENSIONS, TOLERANCES, LIMITS OF SIZE, FORM, LOCATION AND RELATED TERMINOLOGY AND SYMBOLS SHALL BE INTERPRETED IN ACCORDANCE WITH ASME Y14.5-2018
2. BREAK ALL SHARP EDGES AND REMOVE ALL BURRS.
3. UNLESS OTHERWISE SPECIFIED, MACHINED SURFACE FINISH SHALL BE 125 MICROINCHES.
4. THE CONTENTS OF THIS DRAWING IS WASTE ACCEPTANCE IMPACTING (WAI). REFER TO 24590-HLW-RPT-PR-01-001 AND 24590-HLW-WIQP-MH-09-0006.

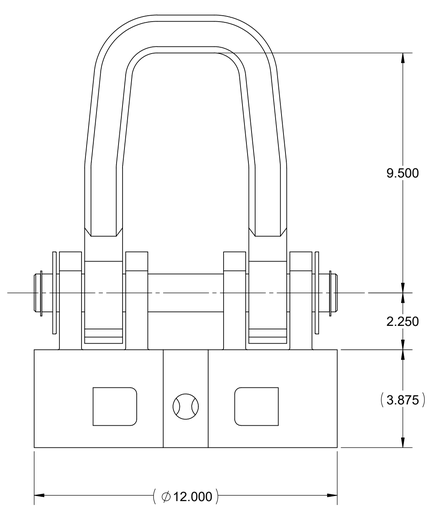

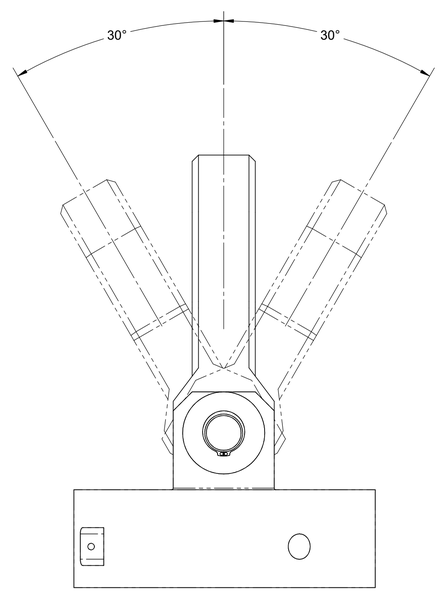

REFERENCE DRAWINGS	
DWG NO.	TITLE
24590-HLW-MX-30-00011001	HLW VIT SYS FAB DWG GRAPPLE ASSEMBLY

DRAWING INDEX	
DWG NO.	TITLE
24590-HLW-MX-30-00020001	HLW VIT SYS FAB DWG LIFTING SHACKLE ASSY
24590-HLW-MX-30-00020002	HLW VIT SYS FAB DWG LIFTING SHACKLE ASSY LIFTING SHACKLE ATTACHMENT LUG DETAIL
24590-HLW-MX-30-00020003	HLW VIT SYS FAB DWG LIFTING SHACKLE ASSY HOOK ATTACHMENT SHACKLE DETAIL
24590-HLW-MX-30-00020004	HLW VIT SYS FAB DWG LIFTING SHACKLE ASSY SHACKLE PIN DETAIL

Q
QUALITY DESIGNATOR

REV	DESCRIPTION	ORG	CHKD	RVWD	APVD	DATE
0	ISSUED FOR PROCUREMENT	LPL	KDD	IMK	JES	9/04/2024

REVISION HISTORY

Originator 2024/08/22 By: Lance Lancaster - llancast Org Name: HLW Mechanical Handling Signed: Aug 22, 2024

Checked By: Kenneth D. Draper - kddraper Org Name: HLW Mechanical Handling Signed: Aug 22, 2024

Reviewed No Comments By: Ian Kincaid - iskincaid Org Name: HLW - Mechanical Handling Signed: Aug 23, 2024

Approved By: Jason Schaeffer - jschaeff2 Org Name: HLW - Mechanical Handling Signed: Sep 06, 2024

DO NOT SCALE DRAWING

THIRD ANGLE PROJECTION

UNLESS OTHERWISE SPECIFIED DIMENSIONS ARE IN INCHES

TOLERANCES UNLESS SPECIFIED

X.X	± .1
X.XX	± .03
X.XXX	± .005
FRACTIONS	± 1/16"
ANGLES	± .5˚

WEIGHT 155.2 LBS

SUPPLIER DWG NO.

ISSUED BY RPP-WTP PDC

ISSUE STAMP

PROJECT No.	24590	
SITE	HANFORD	
AREA	200E	
BUILDING No.	30 (HLW)	
	BY	DATE
ORIGINATOR	L. LANCASTER	8/22/2024
CHECKER	K. DRAPER	8/22/2024
REVIEWER	I. KINCAID	8/23/2024
APPROVER	J. SCHAEFFER	9/04/2024

CONTENT APPLICABLE TO ALARA? [X] YES [ ] NO

ADR NO. 24590-HLW-ADR-M-24-0011 REV: 0

BECHTEL

RIVER PROTECTION PROJECT
WASTE TREATMENT PLANT
450 HILLS STREET
RICHLAND, WA 99354

CONTRACT No: DE-AC27-01RV14136 WTP SUBCONTRACT No:

HLW VITRIFICATION SYSTEM FABRICATION DRAWING LIFTING SHACKLE ASSEMBLY

SCALE: 1:3

24590-HLW-MX-30-00020001

REV 0

LAST SAVED BY: llancast
FILE NAME: 24590-HLW-MX-30-00020
DATE: 8/15/2024 1:05:55 PM

FORMAT WTP ANSI INCH SIZE D (22x34)

'D' SIZE - 22in*34in
COMPUTER GENERATED - MANUAL
DESIGN CHANGES NOT PERMITTED

NOTES:

FOR NOTES, DRAWING INDEX, REFERENCE DRAWINGS AND PART/MATERIAL LISTS, SEE 24590-HLW-MX-30-00020001.

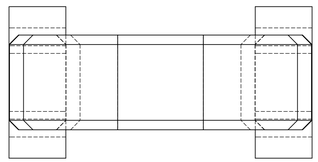

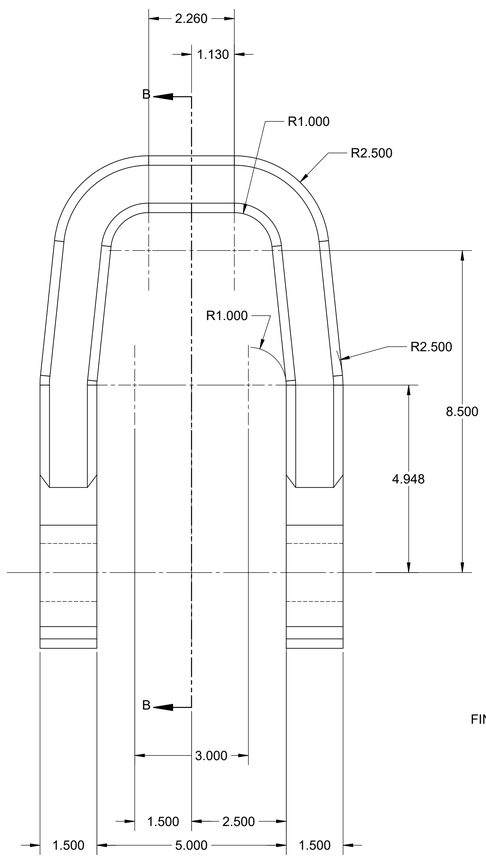

FINISH ALL OVER - 125

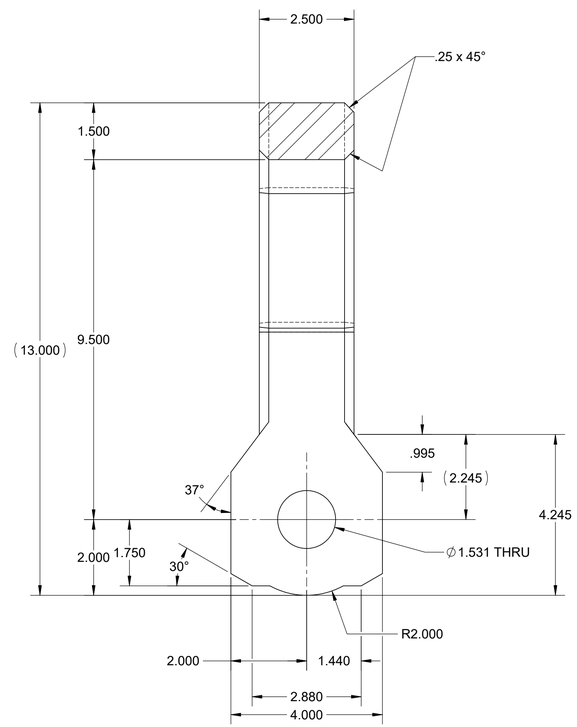

SECTION B-B

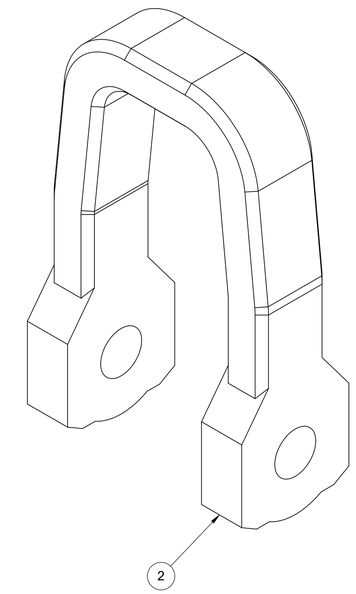

REV	DESCRIPTION	ORG	CHKD	RVWD	APVD	DATE
0	ISSUED FOR PROCUREMENT	LPL	KDD	IMK	JES	9/04/2024

REVISION HISTORY

Q QUALITY DESIGNATOR

Originator By: Lanny Lancaster - llancast Org Name: HLW Mechanical Handling Placed: Aug 22, 2024

Checked By: Kenneth D. Draper - kddraper Org Name: HLW Mechanical Handling Placed: Aug 22, 2024

Reviewed No Comments Org Name: HLW - Mechanical Handling Placed: Aug 23, 2024

Approved By: Jason Schaeffer - jschaeff2 Org Name: HLW - Mechanical Handling Placed: Sep 06, 2024

DO NOT SCALE DRAWING

THIRD ANGLE PROJECTION

UNLESS OTHERWISE SPECIFIED DIMENSIONS ARE IN INCHES

TOLERANCES UNLESS SPECIFIED

X.X	± .1
X.XX	± .03
X.XXX	± .005
FRACTIONS	± 1/16"
ANGLES	± .5°

WEIGHT 155.2 LBS

SUPPLIER DWG NO.

ISSUED BY RPP-WTP PDC

ISSUE STAMP

PROJECT No.	24590	
SITE	HANFORD	
AREA	200E	
BUILDING No.	30 (HLW)	
	BY	DATE
ORIGINATOR	L. LANCASTER	8/22/2024
CHECKER	K. DRAPER	8/22/2024
REVIEWER	I. KINCAID	8/23/2024
APPROVER	J. SCHAEFFER	9/04/2024

CONTENT APPLICABLE TO ALARA? [X] YES [ ] NO

ADR NO. 24590-HLW-ADR-M-24-0011 REV: 0

BECHTEL

RIVER PROTECTION PROJECT
WASTE TREATMENT PLANT
450 HILLS STREET
RICHLAND, WA 99354

CONTRACT No: DE-AC27-01RV14136 WTP SUBCONTRACT No:

HLW VITRIFICATION SYSTEM FABRICATION DRAWING LIFTING SHACKLE ASSEMBLY HOOK ATTACHMENT SHACKLE DETAIL

SCALE: 1:2

24590-HLW-MX-30-00020003

REV 0

LAST SAVED BY: llancast
FILE NAME: 24590-HLW-MX-30-00020
DATE: 8/15/2024 1:05:55 PM

FORMAT WTP ANSI INCH SIZE D (22x34)

'D' SIZE - 22in*34in
COMPUTER GENERATED - MANUAL
DESIGN CHANGES NOT PERMITTED

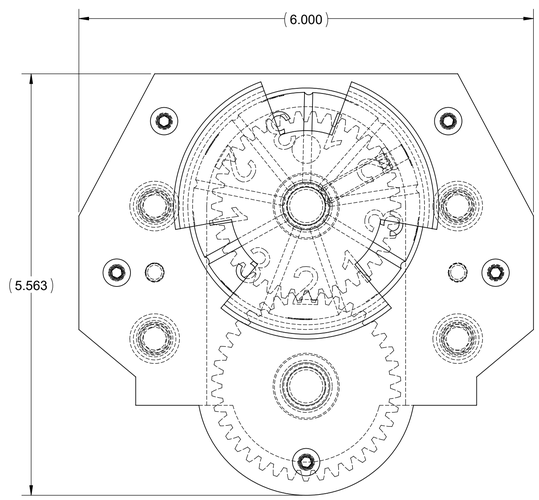

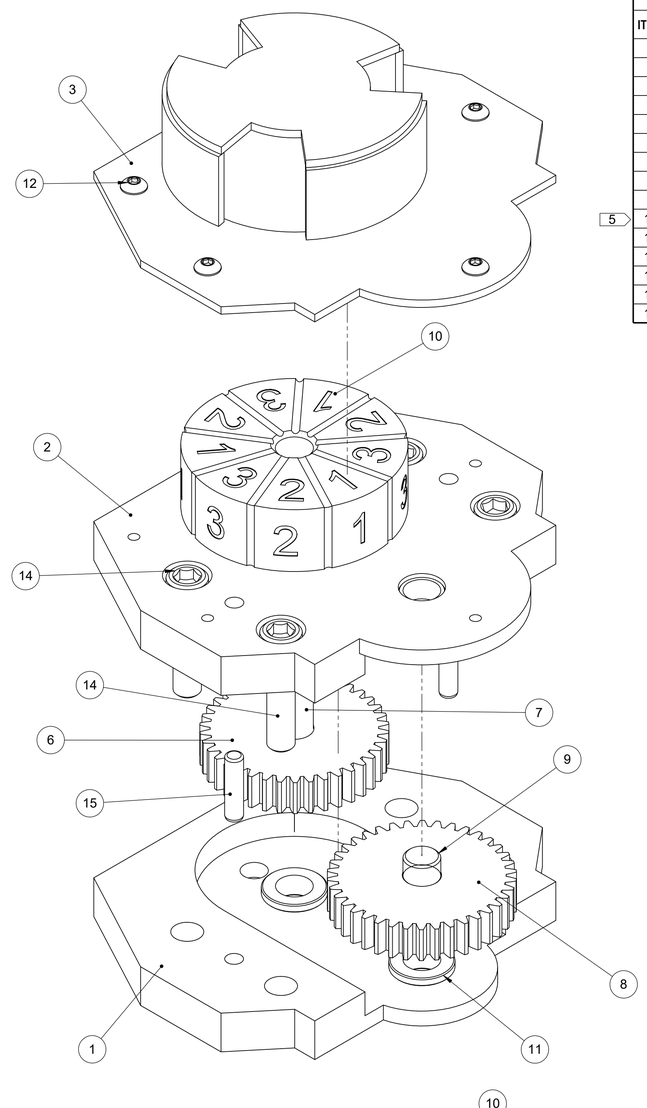

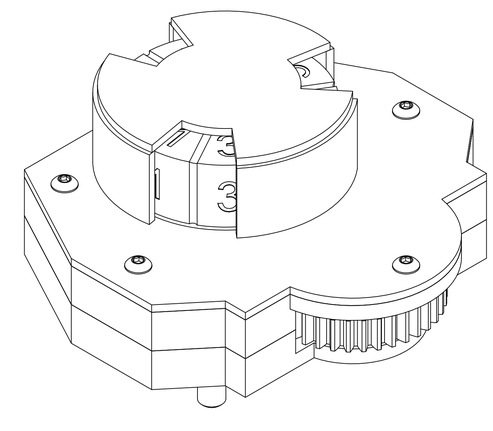

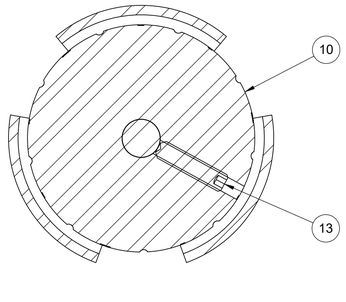

SECTION E-E

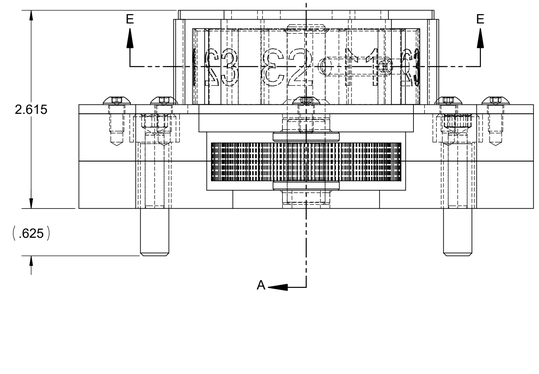

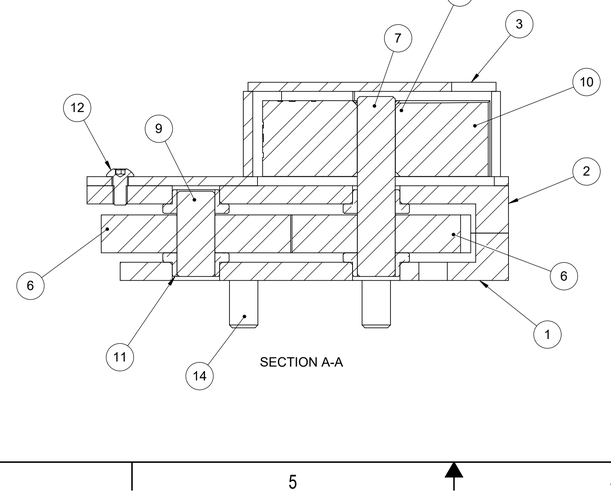

SECTION A-A

BILL OF MATERIALS

ITEM	QTY	DESCRIPTION	RAW MATERIAL	DOCUMENT NUMBER	MATERIAL	WEIGHT (LBS)
1	1	GEAR BODY BOTTOM PLATE	PLT .625 X 5.125 X 6.000	24590-HLW-MX-30-00022002	AISI 316L	3.0
2	1	GEAR BODY TOP PLATE	PLT .625 X 5.563 X 6.000	24590-HLW-MX-30-00022003	AISI 316L	3.1
3	1	HOUSING COVER BASE PLATE	SHT 11GA X 5.563 X 6.000	24590-HLW-MX-30-00022004	AISI 316L	0.6
4	1	HOUSING COVER TOP PLATE	SHT 11GA X 3.375 X 3.375	24590-HLW-MX-30-00022004	AISI 316L	0.2
5	3	HOUSING COVER VERTICAL LEG	PIPE 3.500 OD X 3.250 ID X 1.125	24590-HLW-MX-30-00022004	AISI 316L	0.1
6	1	IDLER GEAR - LONG	PLT .500 X 2.500	24590-HLW-MX-30-00022005	AISI 303	0.6
7	1	IDLER GEAR ROD - LONG	RD BAR Ø.500 X 2.375	24590-HLW-MX-30-00022005	AISI 316L	0.1
8	1	IDLER GEAR - SHORT	PLT .500 X 2.500	24590-HLW-MX-30-00022006	AISI 303	0.6
9	1	IDLER GEAR ROD - SHORT	RD BAR Ø.500 X 1.125	24590-HLW-MX-30-00022006	AISI 316L	0.1
5 10	1	INDICATION CYLINDER	RD BAR Ø3.000 X 1.000	24590-HLW-MX-30-00022007	AISI 316L	2.0
11	4	FLANGED BEARING: 1/2" X 5/8" NOMINAL, 7/8" X 1/8" FLANGE, 5/16" OAL			SAE 841 BRONZE	0.0
12	5	BHCS #10-24 UNC x 0.38 LG F879 SS 304 PLAIN			AISI 304	0.0
13	1	HSSS-CUP 1/4-20 UNC x 1.00 LG F880 SS 304 PLAIN			AISI 304	0.0
14	4	SHCS 3/8-16 UNC x 1.50 LG F837 SS 316 PLAIN		-	AISI 316	0.1
15	2	STD DOWEL PIN 1/4" DIA x 1.000 LG SS 304 PLAIN		-	AISI 304	0.0

NOTES:

1. ALL DIMENSIONS, TOLERANCES, LIMITS OF SIZE, FORM, LOCATION AND RELATED TERMINOLOGY AND SYMBOLS SHALL BE INTERPRETED IN ACCORDANCE WITH ASME Y14.5-2018
2. BREAK ALL SHARP EDGES AND REMOVE ALL BURRS.
3. UNLESS OTHERWISE SPECIFIED, MACHINED SURFACE FINISH SHALL BE 125 MICROINCHES.
4. WELD IN ACCORDANCE WITH AWS D1.6.

5 TO BE ANNEALED (CONDITION A).

REFERENCE DRAWINGS	
DWG NO.	TITLE
24590-HLW-MX-30-00011001	HLW VIT SYS FAB DWG GRAPPLE ASSEMBLY

DRAWING INDEX	
DWG NO.	TITLE
24590-HLW-MX-30-00022001	HLW VIT SYS FAB DWG STATUS INDICATOR ASSY
24590-HLW-MX-30-00022002	HLW VIT SYS FAB DWG STATUS INDICATOR ASSY GEAR BODY BOTTOM PLATE DETAILS
24590-HLW-MX-30-00022003	HLW VIT SYS FAB DWG STATUS INDICATOR ASSY GEAR BODY TOP PLATE DETAILS
24590-HLW-MX-30-00022004	HLW VIT SYS FAB DWG STATUS INDICATOR ASSY HOUSING COVER DETAILS
24590-HLW-MX-30-00022005	HLW VIT SYS FAB DWG STATUS INDICATOR ASSY IDLER GEAR - LONG DETAILS
24590-HLW-MX-30-00022006	HLW VIT SYS FAB DWG STATUS INDICATOR ASSY IDLER GEAR - SHORT DETAILS
24590-HLW-MX-30-00022007	HLW VIT SYS FAB DWG STATUS INDICATOR ASSY INDICATOR CYLINDER DETAILS

Q QUALITY DESIGNATOR

REV	DESCRIPTION	ORG	CHKD	RVWD	APVD	DATE
0	ISSUED FOR PROCUREMENT	LPL	KDD	IMK	JES	9/04/2024

REVISION HISTORY

Originator By: Lacey Lancaster - llancast Org Name: HLW Mechanical Handling Placed: Aug 22, 2024

Checked By: Kenneth D. Draper - kddraper Org Name: HLW Mechanical Handling Placed: Aug 22, 2024

Reviewed No Comments By: Ian Kincaid - ikincaid Org Name: HLW - Mechanical Handling Placed: Aug 23, 2024

Approved By: Jason Schaeffer - jschaeff2 Org Name: HLW - Mechanical Handling Placed: Sep 06, 2024

DO NOT SCALE DRAWING

THIRD ANGLE PROJECTION

UNLESS OTHERWISE SPECIFIED DIMENSIONS ARE IN INCHES

TOLERANCES UNLESS SPECIFIED

X.X	± .1
X.XX	± .03
X.XXX	± .005
FRACTIONS	± 1/16"
ANGLES	± .5°

WEIGHT 11.0 LBS

SUPPLIER DWG NO.

ISSUED BY RPP-WTP PDC

ISSUE STAMP

PROJECT No.	24590	
SITE	HANFORD	
AREA	200E	
BUILDING No.	30 (HLW)	
	BY	DATE
ORIGINATOR	L. LANCASTER	8/22/2024
CHECKER	K. DRAPER	8/22/2024
REVIEWER	I. KINCAID	8/23/2024
APPROVER	J. SCHAEFFER	9/04/2024

CONTENT APPLICABLE TO ALARA? [X] YES [ ] NO

ADR NO. 24590-HLW-ADR-M-24-0011 REV: 0

BECHTEL

RIVER PROTECTION PROJECT
WASTE TREATMENT PLANT
450 HILLS STREET
RICHLAND, WA 99354

CONTRACT No: DE-AC27-01RV14136 WTP SUBCONTRACT No:

HLW VITRIFICATION SYSTEM FABRICATION DRAWING STATUS INDICATOR ASSEMBLY

SCALE: 1:1

24590-HLW-MX-30-00022001

REV 0

LAST SAVED BY: llancast
FILE NAME: 24590-HLW-MX-30-00022
DATE: 8/15/2024 1:12:38 PM

FORMAT WTP ANSI INCH SIZE D (22x34)

'D' SIZE - 22in*34in
COMPUTER GENERATED - MANUAL DESIGN CHANGES NOT PERMITTED

NOTES:

FOR NOTES, DRAWING INDEX, REFERENCE DRAWINGS AND PART/MATERIAL LISTS, SEE 24590-HLW-MX-30-00022001.

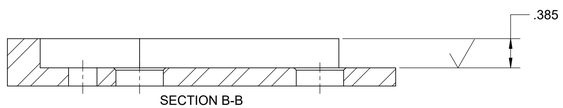

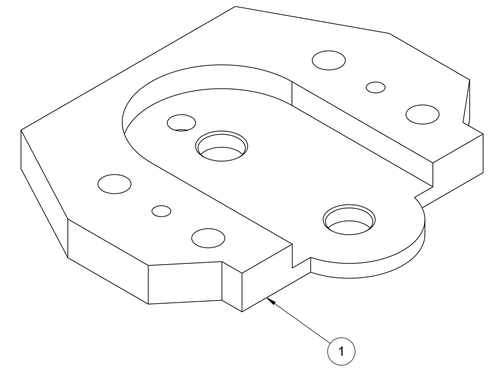

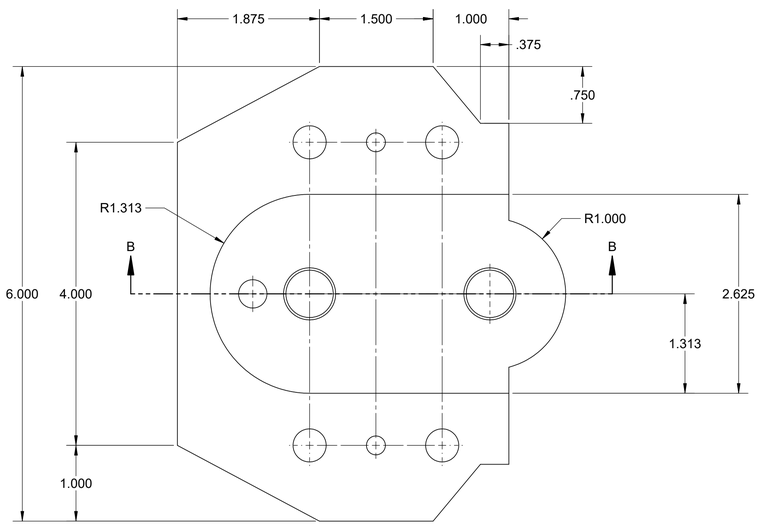

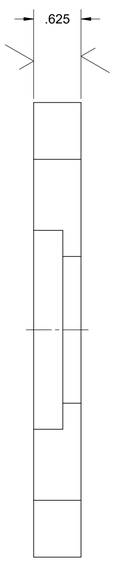

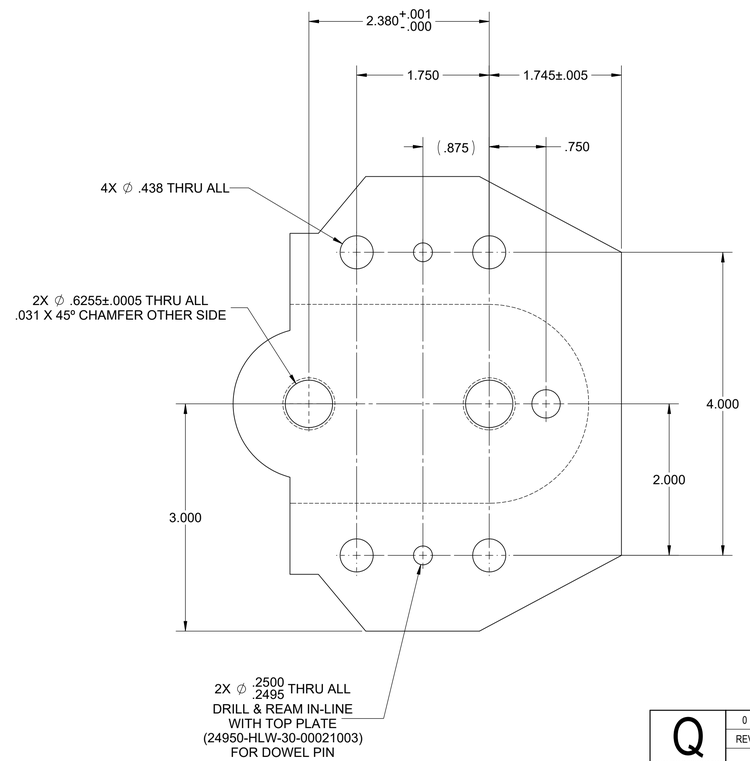

REV	DESCRIPTION	ORG	CHKD	RVWD	APVD	DATE
0	ISSUED FOR PROCUREMENT	LPL	KDD	IMK	JES	9/04/2024

REVISION HISTORY

Q QUALITY DESIGNATOR

Originator By: Lacey Lancaster - llancast Org Name: HLW Mechanical Handling Placed: Aug 22, 2024

Checked By: Kenneth D. Draper - kddraper Org Name: HLW Mechanical Handling Placed: Aug 22, 2024

Reviewed No Comments By: Ian Kincaid - ikincaid Org Name: HLW - Mechanical Handling Placed: Aug 23, 2024

Approved By: Jason Schaeffer - jschaeff2 Org Name: HLW - Mechanical Handling Placed: Sep 06, 2024

DO NOT SCALE DRAWING

THIRD ANGLE PROJECTION

UNLESS OTHERWISE SPECIFIED DIMENSIONS ARE IN INCHES

TOLERANCES UNLESS SPECIFIED

X.X	± .1
X.XX	± .03
X.XXX	± .005
FRACTIONS	± 1/16"
ANGLES	± .5°

WEIGHT 11.0 LBS

SUPPLIER DWG NO.

ISSUED BY RPP-WTP PDC

ISSUE STAMP

PROJECT No.	24590	
SITE	HANFORD	
AREA	200E	
BUILDING No.	30 (HLW)	
	BY	DATE
ORIGINATOR	L. LANCASTER	8/22/2024
CHECKER	K. DRAPER	8/22/2024
REVIEWER	I. KINCAID	8/23/2024
APPROVER	J. SCHAEFFER	9/04/2024

CONTENT APPLICABLE TO ALARA? [X] YES [ ] NO

ADR NO. 24590-HLW-ADR-M-24-0011 REV: 0

BECHTEL

RIVER PROTECTION PROJECT
WASTE TREATMENT PLANT
450 HILLS STREET
RICHLAND, WA 99354

CONTRACT No: DE-AC27-01RV14136 WTP SUBCONTRACT No:

HLW VITRIFICATION SYSTEM FABRICATION DRAWING STATUS INDICATOR ASSEMBLY GEAR BODY BOTTOM PLATE DETAILS

SCALE: 1:1

24590-HLW-MX-30-00022002

REV 0

LAST SAVED BY: llancast
FILE NAME: 24590-HLW-MX-30-00022
DATE: 8/15/2024 1:12:38 PM

FORMAT WTP ANSI INCH SIZE D (22x34)

'D' SIZE - 22in*34in
COMPUTER GENERATED - MANUAL DESIGN CHANGES NOT PERMITTED

NOTES:

FOR NOTES, DRAWING INDEX, REFERENCE DRAWINGS AND PART/MATERIAL LISTS, SEE 24590-HLW-MX-30-00022001.

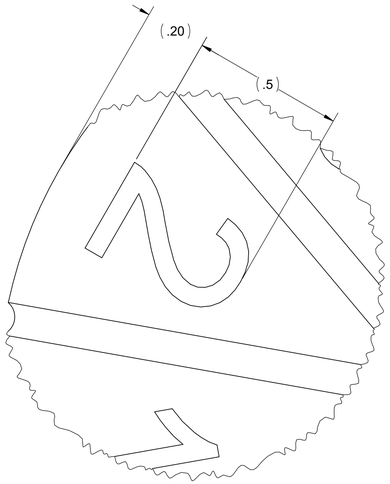

DETAIL F
SCALE 4 : 1

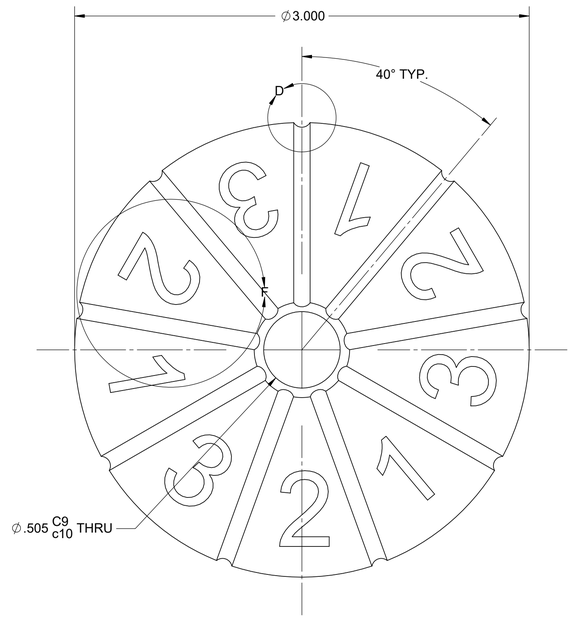

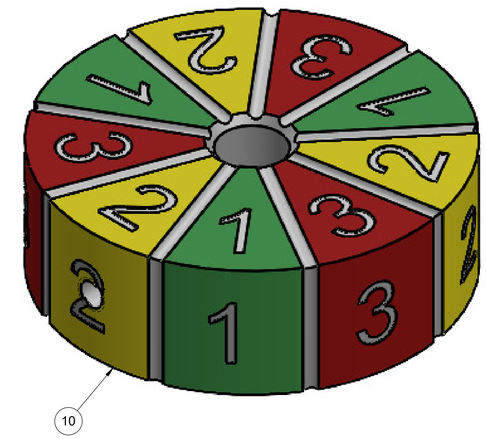

GRAPPLE STATUS INDICATOR - EACH TOP FACE AND SIDE FACE OF CYLINDER SHALL BE PAINTED AND ENGRAVED WITH A CORRESPONDING NUMBER (SEE VISUAL INDICATOR TABLE) WHICH WILL PROVIDE VISUAL INDICATION OF GRAPPLE STATUS WHEN ALIGNED WITH CUT OUT IN HOUSING COVER CAP.

ENGRAVE TO A DEPTH OF .01 AND REMOVE ALL BURRS AND SHAVINGS.

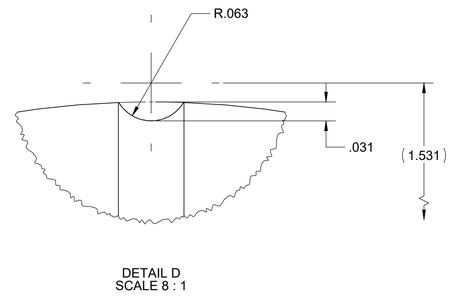

DETAIL D
SCALE 8 : 1

VISUAL INDICATION TABLE		
STATUS	PAINT COLOR	ENGRAVING
GRAPPLE ENGAGED (CLOSED)	GREEN	1
FIRST SET-DOWN (CLOSED)	YELLOW	2
SECOND SET-DOWN (OPEN)	RED	3

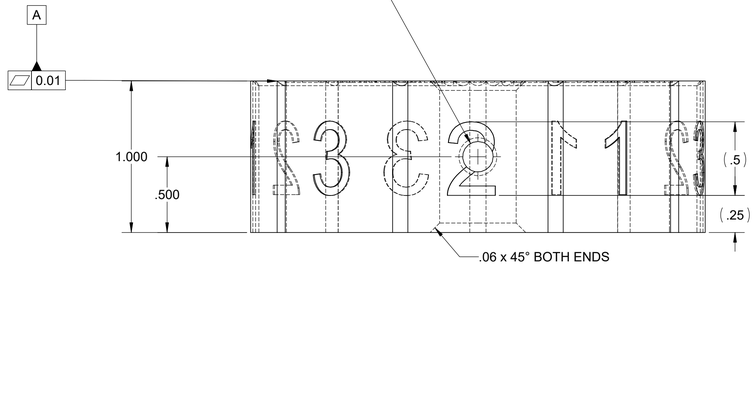

REV	DESCRIPTION	ORG	CHKD	RVWD	APVD	DATE
0	ISSUED FOR PROCUREMENT	LPL	KDD	IMK	JES	9/04/2024

Q QUALITY DESIGNATOR

REVISION HISTORY

Originator By: Lanny Lancaster - llancast Org Name: HLW Mechanical Handling Dated: Aug 22, 2024

Checked By: Kenneth D. Draper - kddraper Org Name: HLW Mechanical Handling Dated: Aug 22, 2024

Reviewed No Comments By: Ian Kincaid - iankincaid Org Name: HLW - Mechanical Handling Dated: Aug 23, 2024

Approved By: Jason Schaeffer - jschaef2 Org Name: HLW - Mechanical Handling Dated: Sep 06, 2024

DO NOT SCALE DRAWING

THIRD ANGLE PROJECTION

UNLESS OTHERWISE SPECIFIED DIMENSIONS ARE IN INCHES

TOLERANCES UNLESS SPECIFIED

X.X	± .1
X.XX	± .03
X.XXX	± .005
FRACTIONS	± 1/16"
ANGLES	± .5°

WEIGHT 11.0 LBS

SUPPLIER DWG NO.

ISSUED BY RPP-WTP PDC

ISSUE STAMP

PROJECT No.	24590
SITE	HANFORD
AREA	200E
BUILDING No.	30 (HLW)

	BY	DATE
ORIGINATOR	L. LANCASTER	8/22/2024
CHECKER	K. DRAPER	8/22/2024
REVIEWER	I. KINCAID	8/23/2024
APPROVER	J. SCHAEFFER	9/04/2024

CONTENT APPLICABLE TO ALARA? [X] YES [ ] NO

ADR NO. 24590-HLW-ADR-M-24-0011 REV: 0

BECHTEL

RIVER PROTECTION PROJECT
WASTE TREATMENT PLANT
450 HILLS STREET
RICHLAND, WA 99354

CONTRACT No: DE-AC27-01RV14136 WTP SUBCONTRACT No:

HLW VITRIFICATION SYSTEM FABRICATION DRAWING STATUS INDICATOR ASSEMBLY INDICATOR CYLINDER DETAILS

SCALE: 2:1

24590-HLW-MX-30-00022007

REV 0

LAST SAVED BY: llancast
FILE NAME: 24590-HLW-MX-30-00022
DATE: 8/15/2024 1:12:38 PM

FORMAT WTP ANSI INCH SIZE D (22x34)

'D' SIZE - 22in*34in
COMPUTER GENERATED - MANUAL
DESIGN CHANGES NOT PERMITTED

BILL OF MATERIALS

ITEM	QTY	DESCRIPTION	RAW MATERIAL	DOCUMENT NUMBER	MATERIAL	WEIGHT (LBS)
1	1	LIFTING ARM POSITION INDICATOR ROD	RD BAR Ø.375 X 18.625	24590-HLW-MX-30-00023002	AISI 316L	0.6
2	1	LIFTING ARM POSITION INDICATOR TOP	RD BAR Ø.750 X 1.500	24590-HLW-MX-30-00023003	AISI 316L	0.2

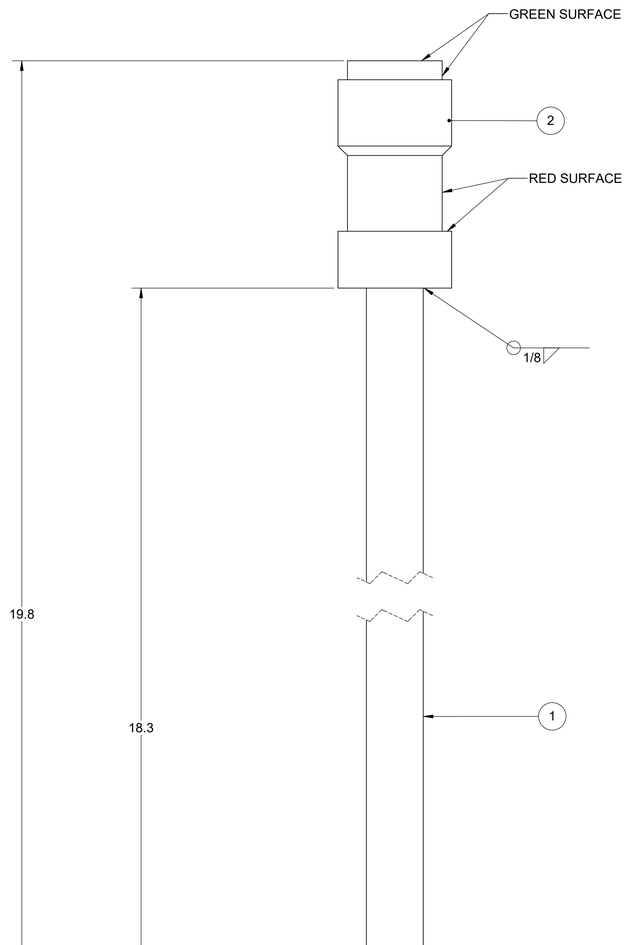

COLOR CODE EXPLANATION:

DISENGAGED:
-WHEN GRAPPLE IS DISENGAGED FROM THE CANISTER THE ROD IS POSITIONED UP EXPOSING RED, INDICATING THERE IS NOT A CANISTER PROPERLY ENGAGED UNDER THE GRAPPLE.

ENGAGED:
-WHEN GRAPPLE IS ENGAGED TO THE CANISTER THE ROD IS PULLED DOWNWARD EXPOSING ONLY GREEN, INDICATING THERE IS A CANISTER PROPERLY ENGAGED UNDER THE GRAPPE.

(THE MOVEMENT OF THIS ROD IS OPPOSITE OF THE CANSITER ROD)

NOTES:

1. ALL DIMENSIONS, TOLERANCES, LIMITS OF SIZE, FORM, LOCATION AND RELATED TERMINOLOGY AND SYMBOLS SHALL BE INTERPRETED IN ACCORDANCE WITH ASME Y14.5-2018
2. BREAK ALL SHARP EDGES AND REMOVE ALL BURRS.
3. UNLESS OTHERWISE SPECIFIED, MACHINED SURFACE FINISH SHALL BE 125 MICROINCHES.
4. WELD IN ACCORDANCE WITH AWS D1.6.

REFERENCE DRAWINGS	
DWG NO.	TITLE
24590-HLW-MX-30-00011001	HLW VIT SYS FAB DWG GRAPPLE ASSEMBLY

DRAWING INDEX	
DWG NO.	TITLE
24590-HLW-MX-30-00023001	HLW VIT SYS FAB DWG LIFTING ARM POSITION INDICATOR
24590-HLW-MX-30-00023002	HLW VIT SYS FAB DWG LIFTING ARM POSITION INDICATOR ROD DETAILS
24590-HLW-MX-30-00023003	HLW VIT SYS FAB DWG LIFTING ARM POSITION INDICATOR TOP DETAILS

Q
QUALITY DESIGNATOR

REV	DESCRIPTION	ORG	CHKD	RVWD	APVD	DATE
0	ISSUED FOR PROCUREMENT	LPL	KDD	IMK	JES	9/04/2024

REVISION HISTORY

Originator By: Lanny Lancaster - llancast Org Name: HLW Mechanical Handling Signed: Aug 22, 2024

Checked By: Kenneth D. Draper - kddraper Org Name: HLW Mechanical Handling Signed: Aug 22, 2024

Reviewed No Comments By: Ian Kincaid - ikincaid Org Name: HLW - Mechanical Handling Signed: Aug 23, 2024

Approved By: Jason Schaeffer - jschaef2 Org Name: HLW - Mechanical Handling Signed: Sep 06, 2024

DO NOT SCALE DRAWING

THIRD ANGLE PROJECTION

UNLESS OTHERWISE SPECIFIED DIMENSIONS ARE IN INCHES

TOLERANCES UNLESS SPECIFIED

X.X	± .1
X.XX	± .03
X.XXX	± .005
FRACTIONS	± 1/16"
ANGLES	± .5°

WEIGHT 0.7 LBS

SUPPLIER DWG NO.

ISSUED BY RPP-WTP PDC

ISSUE STAMP

PROJECT No.	24590
SITE	HANFORD
AREA	200E
BUILDING No.	30 (HLW)

	BY	DATE
ORIGINATOR	L. LANCASTER	8/22/2024
CHECKER	K. DRAPER	8/22/2024
REVIEWER	I. KINCAID	8/23/2024
APPROVER	J. SCHAEFFER	9/04/2024

CONTENT APPLICABLE TO ALARA? [X] YES [ ] NO

ADR NO. 24590-HLW-ADR-M-24-0011 REV: 0

BECHTEL

RIVER PROTECTION PROJECT
WASTE TREATMENT PLANT
450 HILLS STREET
RICHLAND, WA 99354

CONTRACT No: DE-AC27-01RV14136 WTP SUBCONTRACT No:

HLW VITRIFICATION SYSTEM FABRICATION DRAWING LIFTING ARM POSITION INDICATOR

SCALE: 2:1

24590-HLW-MX-30-00023001

REV 0

LAST SAVED BY: llancast
FILE NAME: 24590-HLW-MX-30-00023
DATE: 8/15/2024 1:13:45 PM

FORMAT WTP ANSI INCH SIZE D (22x34)

'D' SIZE - 22in*34in
COMPUTER GENERATED - MANUAL DESIGN CHANGES NOT PERMITTED

NOTES:

FOR NOTES, DRAWING INDEX, REFERENCE DRAWINGS AND PART/MATERIAL LISTS, SEE 24590-HLW-MX-30-00023001.

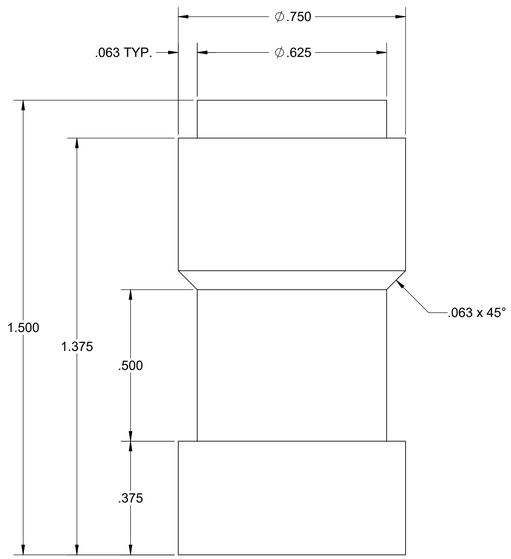

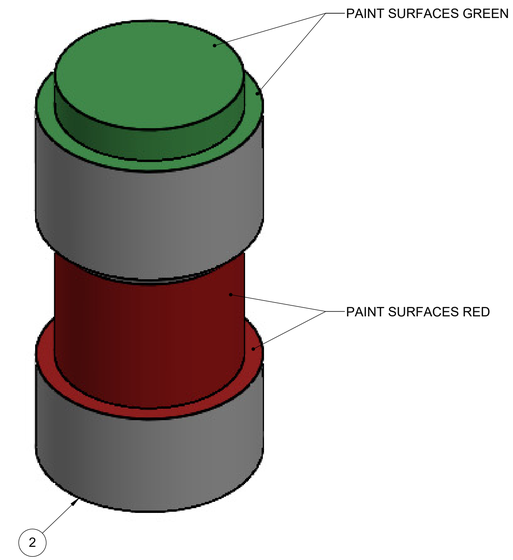

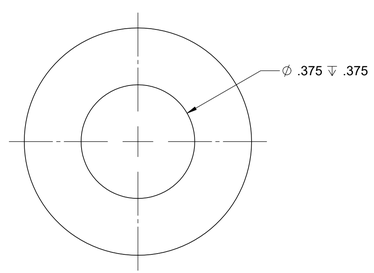

REV	DESCRIPTION	ORG	CHKD	RVWD	APVD	DATE
0	ISSUED FOR PROCUREMENT	LPL	KDD	IMK	JES	9/04/2024

REVISION HISTORY

Q QUALITY DESIGNATOR

Originator By: Larrie Lancaster - llancast Org Name: HLW Mechanical Handling Placed: Aug 22, 2024

Checked By: Kenneth D. Draper - kddraper Org Name: HLW Mechanical Handling Placed: Aug 22, 2024

Reviewed No Comments By: Ian Kincaid - ikincaid Org Name: HLW - Mechanical Handling Placed: Aug 23, 2024

Approved By: Jason Schaeffer - jschaef2 Org Name: HLW - Mechanical Handling Placed: Sep 06, 2024

DO NOT SCALE DRAWING

THIRD ANGLE PROJECTION

UNLESS OTHERWISE SPECIFIED DIMENSIONS ARE IN INCHES

TOLERANCES UNLESS SPECIFIED

X.X	± .1
X.XX	± .03
X.XXX	± .005
FRACTIONS	± 1/16"
ANGLES	± .5°

WEIGHT 0.7 LBS

SUPPLIER DWG NO.

ISSUED BY RPP-WTP PDC

ISSUE STAMP

PROJECT No.	24590
SITE	HANFORD
AREA	200E
BUILDING No.	30 (HLW)

	BY	DATE
ORIGINATOR	L. LANCASTER	8/22/2024
CHECKER	K. DRAPER	8/22/2024
REVIEWER	I. KINCAID	8/23/2024
APPROVER	J. SCHAEFFER	9/04/2024

CONTENT APPLICABLE TO ALARA? [X] YES [ ] NO

ADR NO. 24590-HLW-ADR-M-24-0011 REV: 0

BECHTEL

RIVER PROTECTION PROJECT
WASTE TREATMENT PLANT
450 HILLS STREET
RICHLAND, WA 99354

CONTRACT No: DE-AC27-01RV14136 WTP SUBCONTRACT No:

HLW VITRIFICATION SYSTEM FABRICATION DRAWING LIFTING ARM POSITION INDICATOR TOP DETAIL

SCALE: 4:1

24590-HLW-MX-30-00023003

REV 0

LAST SAVED BY: llancast
FILE NAME: 24590-HLW-MX-30-00023
DATE: 8/15/2024 1:13:45 PM

FORMAT WTP ANSI INCH SIZE D (22x34)

'D' SIZE - 22in*34in
COMPUTER GENERATED - MANUAL
DESIGN CHANGES NOT PERMITTED

BILL OF MATERIALS

ITEM	QTY	DESCRIPTION	RAW MATERIAL	DOCUMENT NUMBER	MATERIAL	WEIGHT (LBS)
1	1	DRIVE GEAR	RD BAR Ø2.500 X .875	24590-HLW-MX-30-00027001	AISI 303	0.6

NOTES:

1. ALL DIMENSIONS, TOLERANCES, LIMITS OF SIZE, FORM, LOCATION AND RELATED TERMINOLOGY AND SYMBOLS SHALL BE INTERPRETED IN ACCORDANCE WITH ASME Y14.5-2018
2. BREAK ALL SHARP EDGES AND REMOVE ALL BURRS.
3. UNLESS OTHERWISE SPECIFIED, MACHINED SURFACE FINISH SHALL BE 125 MICROINCHES.

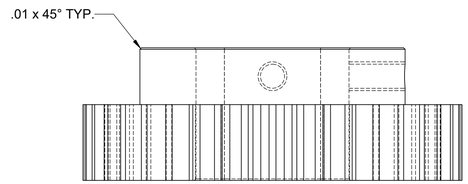

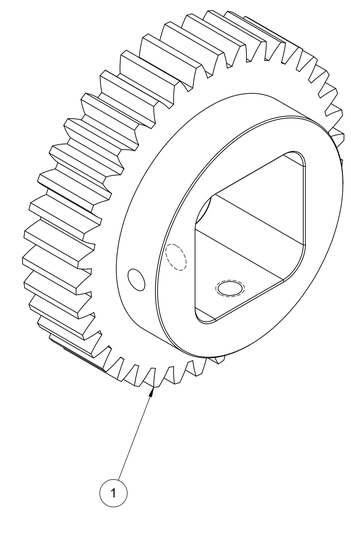

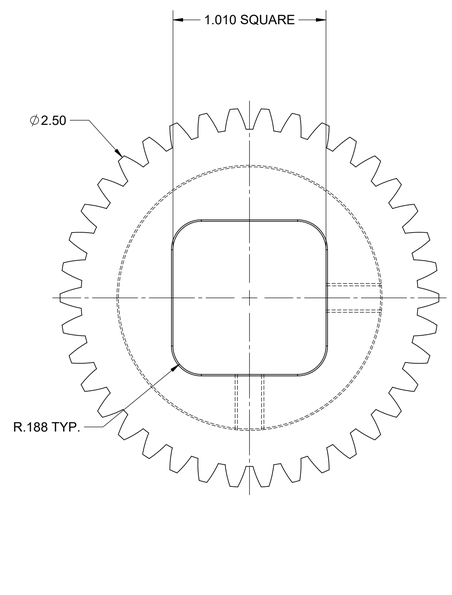

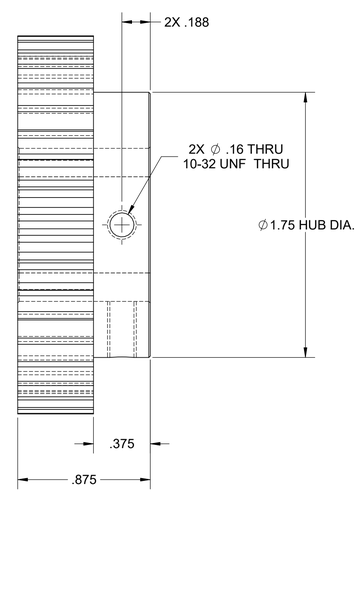

SPUR GEAR DATA	
PITCH	16
PRESSURE ANGLE	20
NUMBER OF TEETH	38
PITCH DIA.	2.375
OUTSIDE DIA.	2.500
ROOT DIA.	2.230

DRAWING INDEX

DWG NO.	TITLE
24590-HLW-MX-30-00027001	HLW VIT SYS FAB DWG DRIVE GEAR

REFERENCE DRAWINGS

DWG NO.	TITLE
24590-HLW-MX-30-00011001	HLW VIT SYS FAB DWG GRAPPLE ASSEMBLY

REVISION HISTORY

REV	DESCRIPTION	ORG	CHKD	RVWD	APVD	DATE
0	ISSUED FOR PROCUREMENT	LPL	KDD	IMK	JES	9/04/2024

Q QUALITY DESIGNATOR

Originator By: Larry Lancaster - llancast Org Name: HLW Mechanical Handling Signed: Aug 22, 2024

Checked By: Kenneth D. Draper - kddraper Org Name: HLW Mechanical Handling Signed: Aug 22, 2024

Reviewed No Comments By: Ian Kincaid - iikincaid Org Name: HLW - Mechanical Handling Signed: Aug 23, 2024

Approved By: Jason Schaeffer - jschaef2 Org Name: HLW - Mechanical Handling Signed: Sep 06, 2024

DO NOT SCALE DRAWING

THIRD ANGLE PROJECTION

UNLESS OTHERWISE SPECIFIED DIMENSIONS ARE IN INCHES

TOLERANCES UNLESS SPECIFIED

X.X	± .1
X.XX	± .03
X.XXX	± .005
FRACTIONS	± 1/16"
ANGLES	± .5°

WEIGHT 0.6 LBS

SUPPLIER DWG NO.

ISSUED BY RPP-WTP PDC

ISSUE STAMP

PROJECT No.	24590
SITE	HANFORD
AREA	200E
BUILDING No.	30 (HLW)

	BY	DATE
ORIGINATOR	L. LANCASTER	8/22/2024
CHECKER	K. DRAPER	8/22/2024
REVIEWER	I. KINCAID	8/23/2024
APPROVER	J. SCHAEFFER	9/04/2024

CONTENT APPLICABLE TO ALARA? [X] YES [ ] NO

ADR NO. 24590-HLW-ADR-M-24-0011 REV: 0

BECHTEL

RIVER PROTECTION PROJECT
WASTE TREATMENT PLANT
450 HILLS STREET
RICHLAND, WA 99354

CONTRACT No: DE-AC27-01RV14136 WTP SUBCONTRACT No:

HLW VITRIFICATION SYSTEM FABRICATION DRAWING DRIVE GEAR

SCALE: 1:2

24590-HLW-MX-30-00027001

REV 0

LAST SAVED BY: llancast
FILE NAME: 24590-HLW-MX-30-00027
DATE: 9/15/2024 1:27:44 PM

FORMAT WTP ANSI INCH SIZE D (22x34)

'D' SIZE - 22in*34in
COMPUTER GENERATED - MANUAL DESIGN CHANGES NOT PERMITTED

DESCRIPTION	GRAPPLE PLANT ITEM NUMBER	CRANE PLANT ITEM NUMBER	ROOM NUMBER
CANISTER DECONTAMINATION CAVE CANISTER GRAPPLE (CLEAN)	24590-HLW-FH-HDH-TOOL-00001	24590-HLW-MJ-HDH-CRN-00005	H-0133
CANISTER DECONTAMINATION CAVE CANISTER GRAPPLE (DIRTY)	24590-HLW-FH-HDH-TOOL-00004	24590-HLW-MJ-HDH-CRN-00005	H-0133
CANISTER GRAPPLE CANISTER STORAGE CAVE	24590-HLW-FH-HEH-TOOL-00001	24590-HLW-MJ-HEH-CRN-00003	H-0132
THREE JAW GRAPPLE, CANISTER HANDLING CAVE, LOWER CRANE	24590-HLW-FH-HPH-TOOL-00001	24590-HLW-MJ-HPH-CRN-00001	H-0136
THREE JAW GRAPPLE, SPARE	24590-HLW-FH-HPH-TOOL-00018	N/A	H-0329A
MECHANICAL SEQUENCE GRAPPLE	24590-HLW-FH-HRH-TOOL-00002	24590-HLW-MJ-HRH-HST-00002	H-0135A
CANISTER GRAPPLE	24590-HLW-FH-HSH-TOOL-00004	24590-HLW-MJ-HSH-CRN-00001	H-0117
THREE JAW GRAPPLE, CANISTER HANDLING CAVE, UPPER CRANE	24590-HLW-FH-HPH-TOOL-00017	24590-HLW-MJ-HPH-CRN-00002	H-0136

BILL OF MATERIALS

ITEM	QTY	DESCRIPTION	RAW MATERIAL	DOCUMENT NUMBER	MATERIAL	WEIGHT (LBS)
1	1	GRAPPLE LABEL	SHT .063 X 6.000 X 2.250	24590-HLW-MX-30-00028001	AISI 316L	0.2

NOTES:

1. MAKE ONE LABEL FOR EACH GRAPPLE PLANT ITEM NUMBER, (8) TOTAL.
2. ALL DIMENSIONS, TOLERANCES, LIMITS OF SIZE, FORM, LOCATION AND RELATED TERMINOLOGY AND SYMBOLS SHALL BE INTERPRETED IN ACCORDANCE WITH ASME Y14.5-2018
3. BREAK ALL SHARP EDGES AND REMOVE ALL BURRS.
4. UNLESS OTHERWISE SPECIFIED, MACHINED SURFACE FINISH SHALL BE 125 MICROINCHES.
5. MANUFACTURER TO INSERT NAME IN PLACE OF "(MANUFACTURERS NAME)".
6. MANUFACTERER TO INSERT TOTAL WEIGHT, AFTER FULL ASSEMLBY, INTO "GRAPPLE WIEIGHT: XXX LBS", WHERE XXX IS TOTAL WEIGHT IN POUNDS.

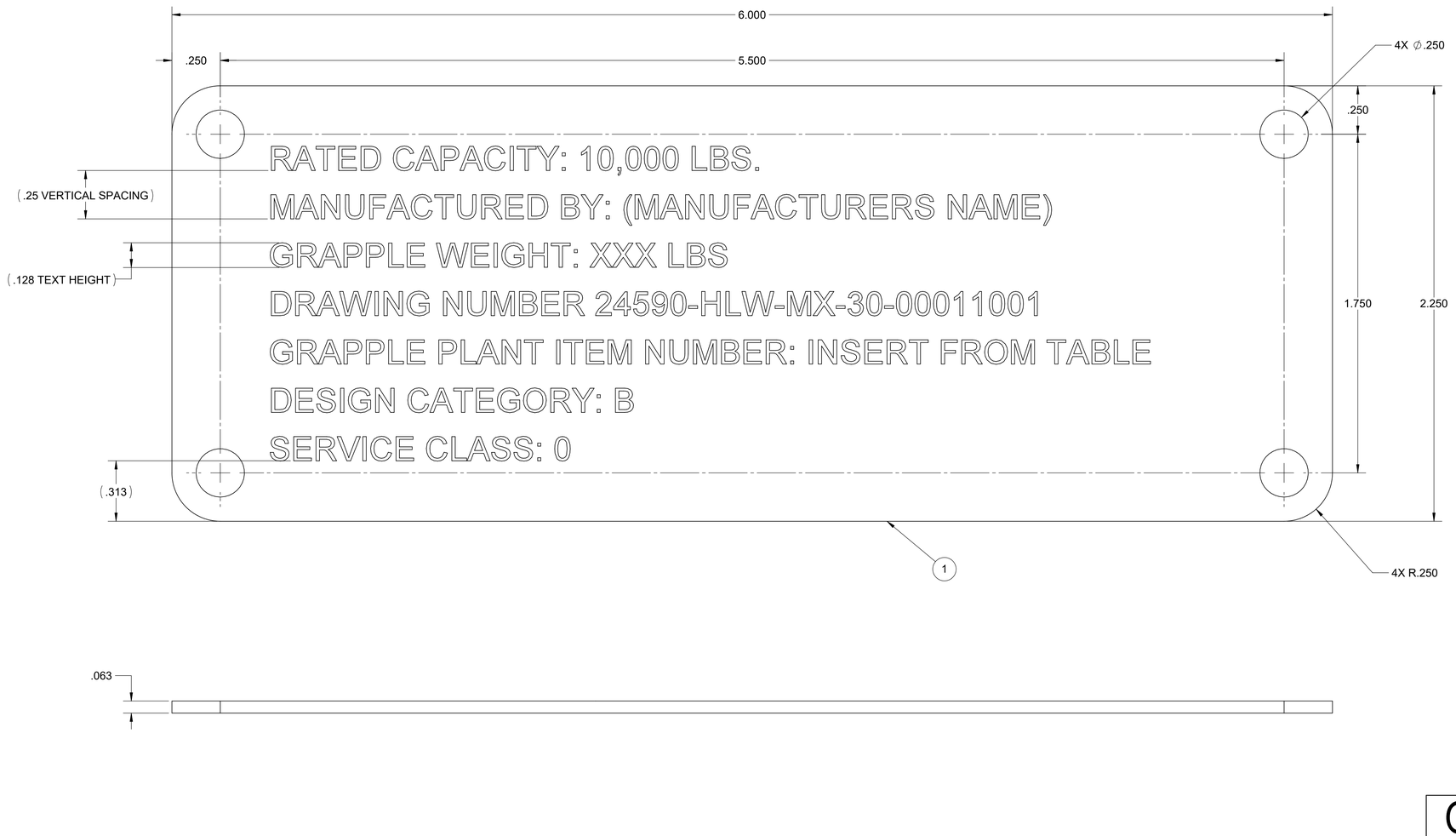

DRAWING INDEX	
DWG NO.	TITLE
24590-HLW-MX-30-00028001	HLW VIT SYS FAB DWG GRAPPLE LABEL

REFERENCE DRAWINGS	
DWG NO.	TITLE
24590-HLW-MX-30-00011001	HLW VIT SYS FAB DWG GRAPPLE ASSEMBLY

Q QUALITY DESIGNATOR

REV	DESCRIPTION	ORG	CHKD	RVWD	APVD	DATE
0	ISSUED FOR PROCUREMENT	LPL	KDD	IMK	JES	9/6/2024

REVISION HISTORY

Originator By: Lanny Lancaster - llancast Org Name: HLW Mechanical Handling Placed: Sep 06, 2024

Checked By: Kenneth D. Draper - kddraper Org Name: HLW Mechanical Handling Placed: Sep 06, 2024

Reviewed No Comments By: Ian Keid - ikincaid Org Name: HLW - Mechanical Handling Placed: Sep 06, 2024

Approved By: Jason Schaeffer - jschaeff2 Org Name: HLW - Mechanical Handling Placed: Sep 06, 2024

DO NOT SCALE DRAWING

THIRD ANGLE PROJECTION

UNLESS OTHERWISE SPECIFIED DIMENSIONS ARE IN INCHES

TOLERANCES UNLESS SPECIFIED

X.X	± .1
X.XX	± .03
X.XXX	± .005
FRACTIONS	± 1/16"
ANGLES	± .5°

WEIGHT 0.2 LBS

SUPPLIER DWG NO.

ISSUED BY RPP-WTP PDC

ISSUE STAMP

PROJECT No.	24590
SITE	HANFORD
AREA	200E
BUILDING No.	30 (HLW)

	BY	DATE
ORIGINATOR	L. LANCASTER	9/6/2024
CHECKER	K. DRAPER	9/6/2024
REVIEWER	I. KINCAID	9/6/2024
APPROVER	J. SCHAEFFER	9/6/2024

CONTENT APPLICABLE TO ALARA? [X] YES [ ] NO

ADR NO. 24590-HLW-ADR-M-24-0011 REV: 0

BECHTEL

RIVER PROTECTION PROJECT
WASTE TREATMENT PLANT
450 HILLS STREET
RICHLAND, WA 99354

CONTRACT No: DE-AC27-01RV14136 WTP SUBCONTRACT No:

HLW VITRIFICATION SYSTEM FABRICATION DRAWING GRAPPLE LABEL

SCALE: 3:1

24590-HLW-MX-30-00028001

REV 0

LAST SAVED BY: llancast
FILE NAME: 24590-HLW-MX-30-00028
DATE: 8/23/2024 1:43:52 PM

FORMAT WTP ANSI INCH SIZE D (22x34)

'D' SIZE - 22in*34in
COMPUTER GENERATED - MANUAL DESIGN CHANGES NOT PERMITTED